Series 19X MAXI® Circuit Breakers



Series 19X MAXI® Circuit Breakers
Auto, Manual & Modified Reset

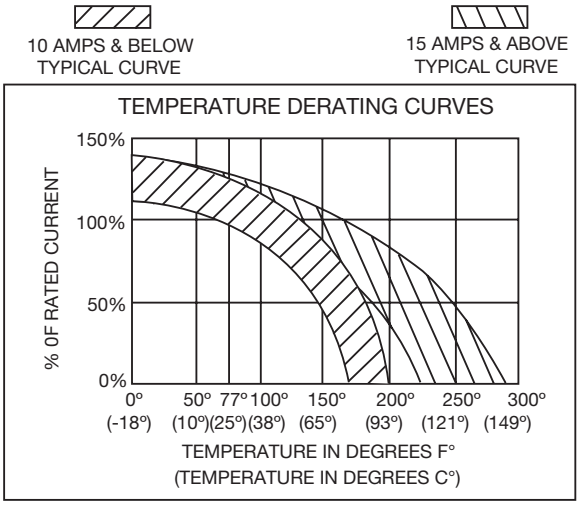

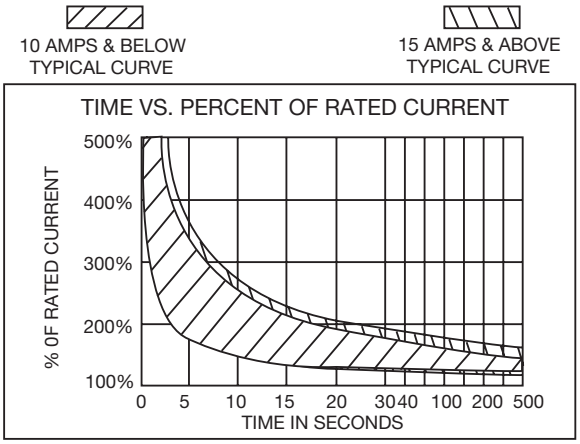

Specifications

Single Pole Thermal Type Breakers
Rating: 8-50A; 14Vdc; 28Vdc (Series 193, 194, & 195)
Interrupt Rating: 150A @ 14Vdc (8-10A versions); 225A@ 14Vdc (15A version); 300A @ 14Vdc (20A version); 450A@ 14Vdc (25-30A versions); 600A @ 4Vdc (35-40A versions); 750A @ 14Vdc (50A version)
Operating Temperature Rating: –40°F (–40°C) to 185°F (85°C)
Storage Temperature Rating: –40°F (–40°C) to 260°F (125°C)
Materials: Grey UL-Rated 94V0 thermoplastic
Termination: Compatible with fuse blocks accepting MAXI® or ATC® blade fuses
Compliances: SAE J553, SAE J1171 (ignition protected)

Dimensions - in(mm)

(Dims. Shown are for reference only. Contact factory for latest prints)

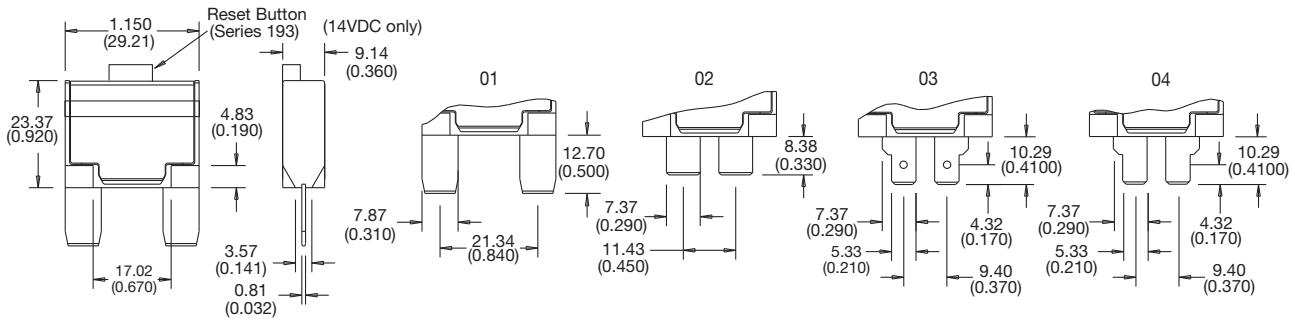

Terminal Options

Part Numbering System

Series
1 9 ❑
191 – Type I, 14 VDC
192 – Type II, 14 VDC
193 – Type III, 12V/24 VDC
194 – Type I, 24 VDC
195 – Type II, 24 VDC

Rating
❑❑ –
08 – 8 amps
10 – 10 amps
15 – 15 amps
20 – 20 amps
25 – 25 amps
30 – 30 amps
35 – 35 amps
40 – 40 amps
50 – 50 amps (191, 193, 194 only)

Terminal
❑❑
01 – MAXI®
02 – Wide ATC®
03 – Long ATC® (w/dimple)
04 – Long ATC® (no dimple)

Cover
M –
M – Metal*

Marking
❑
(Consult factory for special markings.)