COMBO/LC SERIES

Adjustable arm with a 9-1/2" diameter shade, inner reflector and porcelain socket. 3-conductor cord set. Includes FC8T9/CW 22 watt fluorescent tube and 60 watt incandescent bulb (max 100) LC1/A has a 45" arm. LC2/A has a 30" arm.
UL Listed.

Model Number	Reach	Mounting	Color Specify	Price
LC-1/A	45"	"A" Clamp	Black (BK) White (WT) Oyster (OW) Light gray (LG)	$205.00
LC-2/A	30"	"A" Clamp		205.00

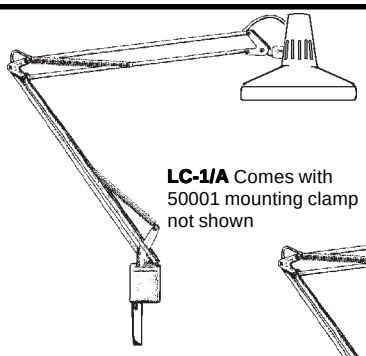

LC-1/A Comes with 50001 mounting clamp not shown

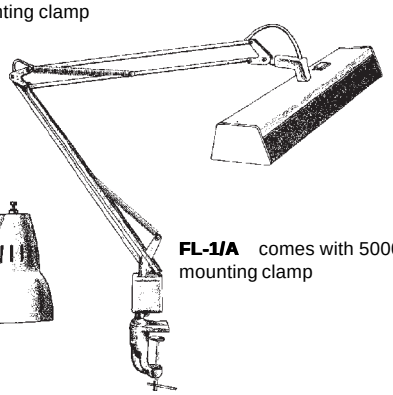

FL Fluorescent Lamp

Adjustable arm with heavy duty metal shade. The FL1/A has three conductor cord set and comes with two F15T8/CW15 watt fluorescent tubes. The FL1/A can reach up to 45" and comes with a clamp for mounting on horizontal surfaces.
UL Listed.

Model Number	Reach	Mounting	Colors Specify	Price
FL-1/A	45"	"A" Clamp	Black (BK) White (WT) Oyster (OW) Light gray (LG)	$205.00

FL-1/A comes with 50001 mounting clamp

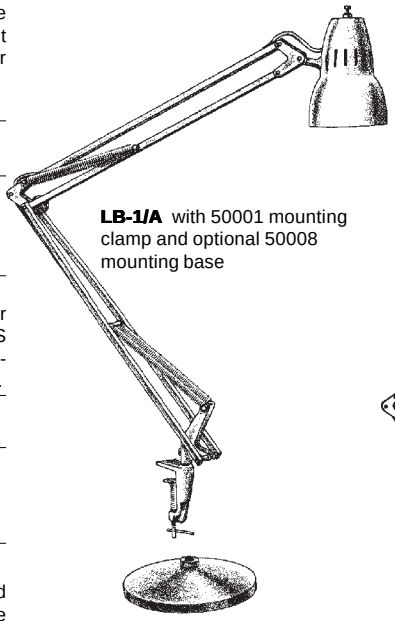

LB-1/A with 50001 mounting clamp and optional 50008 mounting base

LS SERIES

Luxo's premier incandescent series with two-conductor cord set, 45" or 30 inch arm, 8" shade and inner reflector and porcelain socket. All LS models are 100 watt rated and come with 60 watt bulb. LS-1/A and LS-2/A include a clamp for mounting on horizontal surfaces. UL Listed.

Model Number	Reach	Mounting	Colors Specify	Price
LS-1/A	45"	"A" Clamp	Black (BK)	$130.00
LS-2/A	30"	"A" Clamp	White (WT)	130.00
LS-1/E	45"	Metal Base	Oyster (OW)	162.00
LS-2/E	30"	Metal Base	Light gray (LG)	162.00

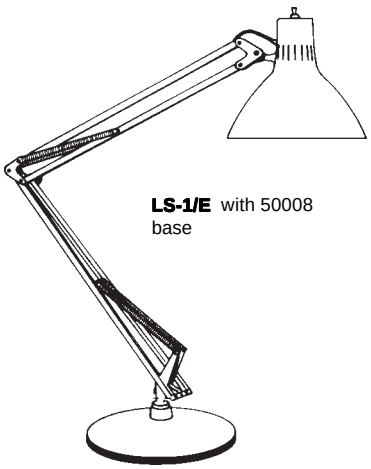

LS-1/E with 50008 base

LB SERIES

Adjustable arm with 4-5/8" diameter bullet shade, inner reflector and porcelain socket. All LB Models have 3 conductor cord sets and come with a 60 watt bulb. Model LB-1/A has 45" reach. LB2/A has a 30" reach. UL Listed.

Model Number	Reach	Mounting	Colors Specify	Price
LB-1/A	45"	"A"Clamp	Black (BK)	$130.00
LB-2/A	30"	"A"Clamp	White (WT) Oyster (OW) Light gray (LG)	130.00

MOUNTING OPTIONS

Description	Model Number	Colors Specify	Price
A - Edge Mount Clamp. For edge mounting on horizontal surfaces	50001	Black (BK) White (WT) Oyster (OW) Light gray (LG)	$13.00
B - Wall Mount Bracket. For permanent mounting on vertical surfaces.	50003		$13.00
C - Surface Mount Bracket. For permanent mounting on horizontal surfaces.	50005		$13.00
E-Round Weighted base. For use with all Luxo incandescent lamps except LIL.	50008		$56.00
D - Drafting Board Bracket. For edge mounting on inclined surfaces such as drafting boards	60016		$21.00
M- Economy mounting Bracket for use with Magalux (16272.).	50015	Black (BK) White (WT)	$8.00

50001



50002



60016

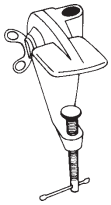

50003

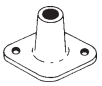

50008



50015

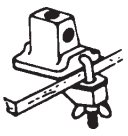

50052

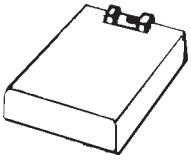

Technologically advanced illuminated magnifier lets you see work in a new light. 3-diopter lens in 6-3/4 x 4-1/2"Stadium shaped viewing area. Twin 7- watt fluorescent light sources with independent switches; (one light for 3 - dimensional viewing; both lights for shadow-free illumination). U.L. Listed

Model Number	Reach	Mounting	Color Specify	Price
17805	45"	"A" Clamp	Black (BK)	$415.00
17806	30"	"A" Clamp	Light gray (LG)	415.00

INTERMEDIATE FLUORESCENT MAGNIFIER

Adjustable 45" arm with 5" diameter, 3 diopter lens, including 3-conductor cord set FC8T9/CW 22 watt fluorescent tube, and a clamp for mounting to horizontal surfaces. Unit comes with a splash guard diffuser. No lens accessories available with this model. U.L. Listed.

Model Number	Reach	Mounting	Color	Price
16301	45"	"A" Clamp	Light gray (LG)	$170.00

MAGNA-LUX II MAGNIFIER

Economy multipurpose magnifier with 39" arm reach. 60 watt showcase (60T10/CF) bulb; 5" diagonally measured 3 diopter lens. Universal Mtg. Bkt., and 2-conductor cord set. U.L. Listed.

Model Number	Reach	Mounting	Color	Price
16272	39"	"M" Clamp	Black (BK)	$85.00

EXHAUST FAN LAMP

Models come on a 45" and 30" adjustable heavy duty K-arm. Separate switches for fan and lamp. 5-bladed fan delivers 100CFM @ 2.900 rpm. Equipped with 3 conductor cord set. FC8T9/CW 22 watt fluorescent tube and clamp for mounting to horizontal surfaces. U.L. Listed.

Model Number	Reach	Mounting	Color	Price
16159	45"	"A" Clamp	Light gray (LG)	$350.00
16160	30"	"A" Clamp		350.00

KFM MAGNIFIER SERIES

All models are on adjustable K-arm (no external springs) with 5" diameter, 3 diopter (3d) or 5 diopter (5d) lens. Units include an FC8T9/CW 22 watt fluorescent tube. Model KFM-1/A has a 45" reach; models KFM-2/A and KFM-2/FE have a 30" reach. KFM-1/A and KFM-2/A come with a clamp for mounting to horizontal surfaces; KFM-2/FE is mounted in a weighted base. All models include an industrial grade splash guard/diffuser. UL Listed.

Model Number	Reach	Mounting	Diopter	Colors Specify	Price
17113	45"	"A" Clamp	3	Black (BK) White (WT) Oyster (OW) Light gray (LG)	$253.00
17115	45"	"A" Clamp	5		270.00
17213	30"	"A" Clamp	3		305.00
17215	30"	"A" Clamp	5		270.00
17253	30"	Metal Base	3		325.00
17255	30"	Metal base	5		345.00

KFM LENS

Primary lens available up to 20 diopter can be changed by simply removing three screws. Secondary lenses snap on in seconds. The 10 Diopter swing - away lens clips on

Secondary lenses Ordering Guide

Model	Lens	Diameter	Price
50201	4d	4 inches	$47.00
50202	8d	3-1/8 inches	54.00
50203	10d (swing away)	1-1/2 inches	110.00

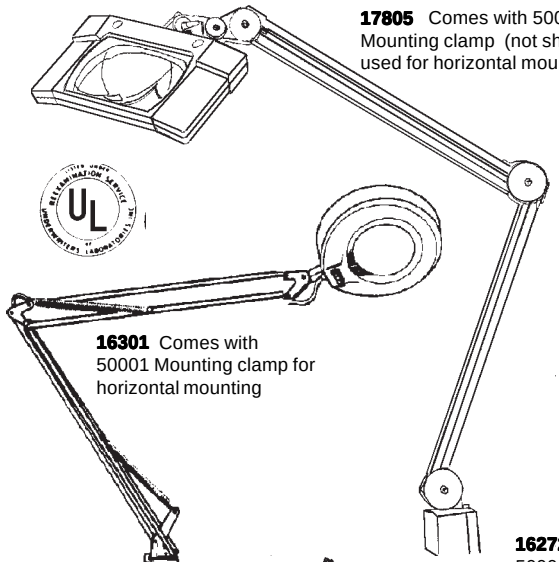

17805 Comes with 50001 Mounting clamp (not shown) used for horizontal mounting

16301 Comes with 50001 Mounting clamp for horizontal mounting

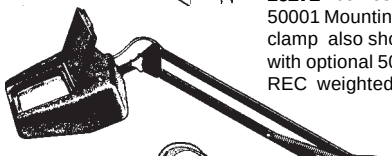

16272 comes with 50001 Mounting clamp also shown with optional 50052 REC weighted base.

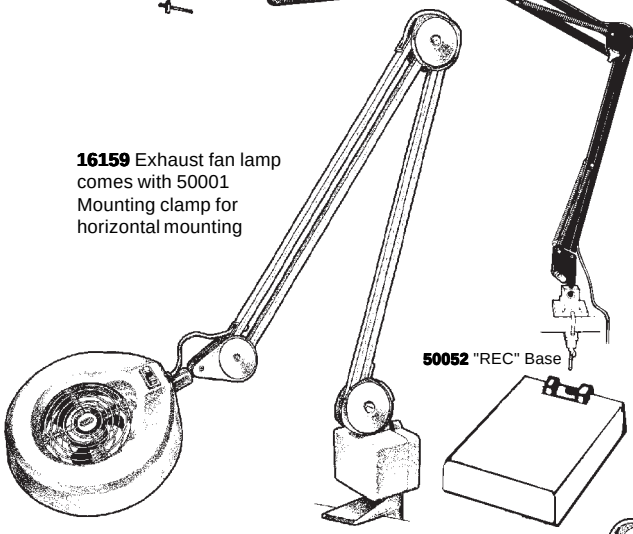

16159 Exhaust fan lamp comes with 50001 Mounting clamp for horizontal mounting

50052 "REC" Base

OUR BEST SELLER!

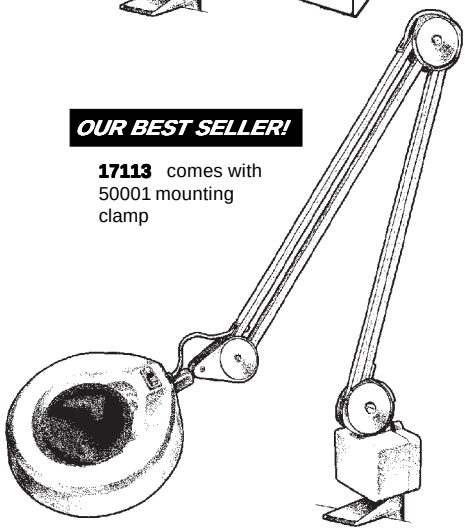

17113 comes with 50001 mounting clamp

50201

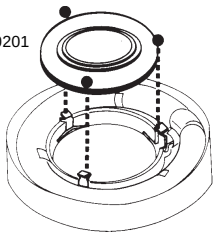

50203

