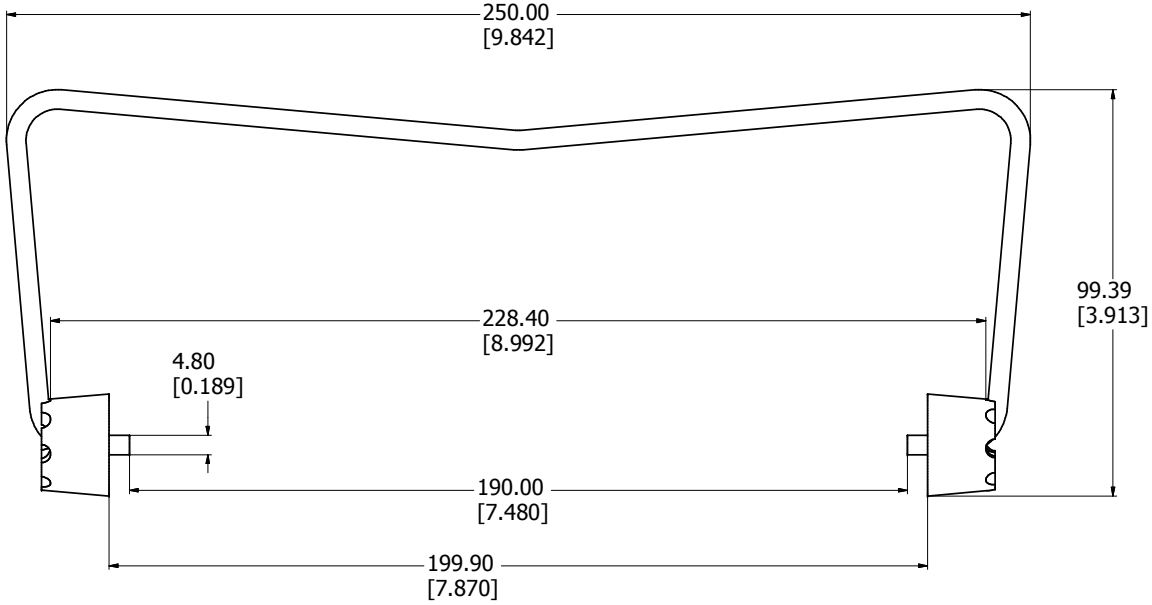

BAIL WITH ADJUSTMENT MOUNTS

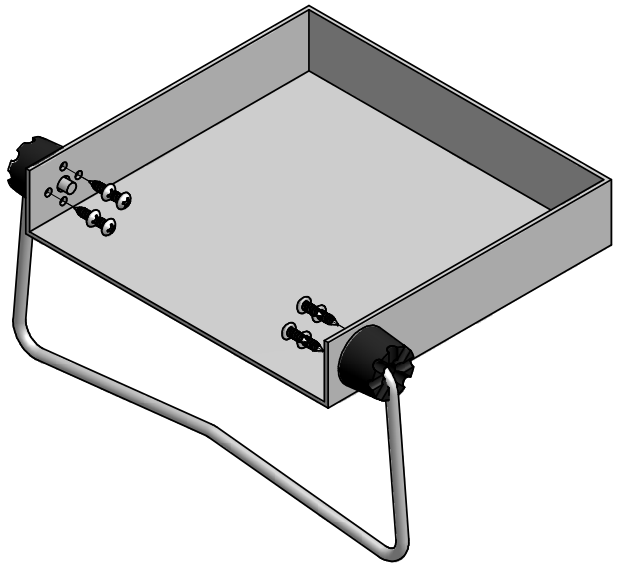

EXPLODED BAIL ASSEMBLY (BOX NOT INCLUDED)

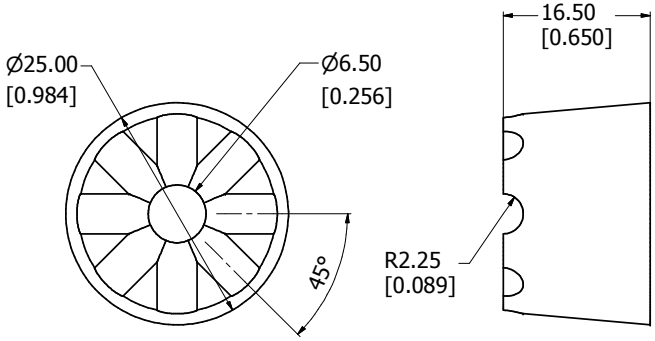

ADJUSTMENT MOUNT

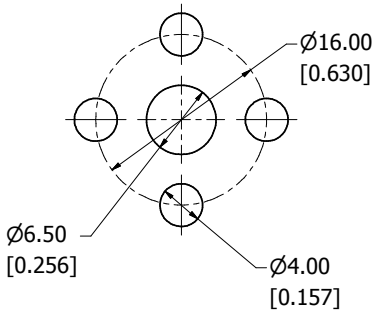

MOUNTING HOLE LOCATIONS

1589TH2
Bail - Bright Chrome Plated Steel
Feet - Matte Black Plastic
Hardware
8 Screws - Panhead Self Tapping 6-32 x 3/8"
*Bail for 1598H & J Enclosures
**note bail sold singly

HAMMOND MANUFACTURING™

1598TH2