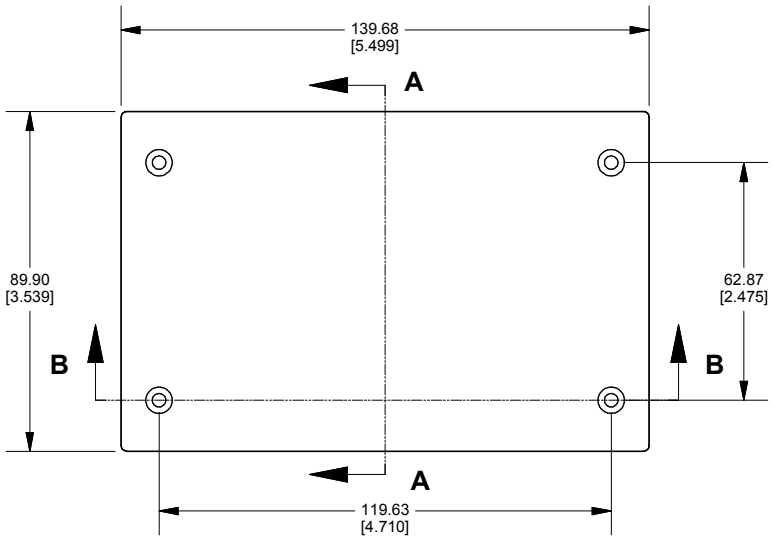

ASSEMBLY TOP VIEW

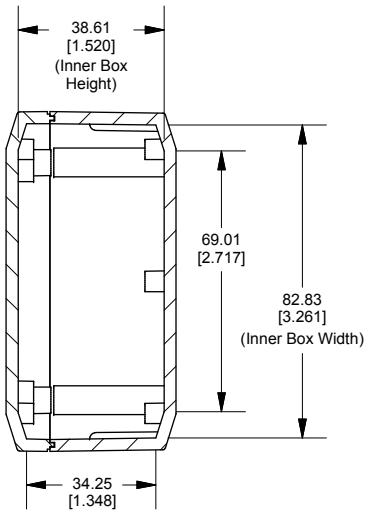

SECTION A-A

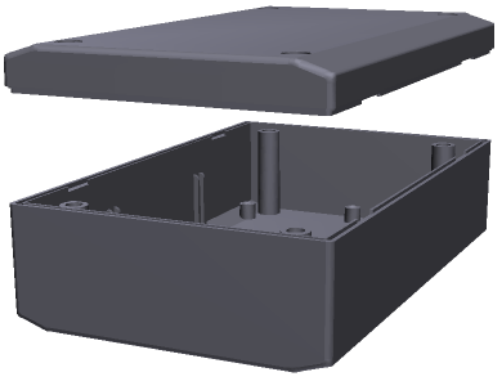

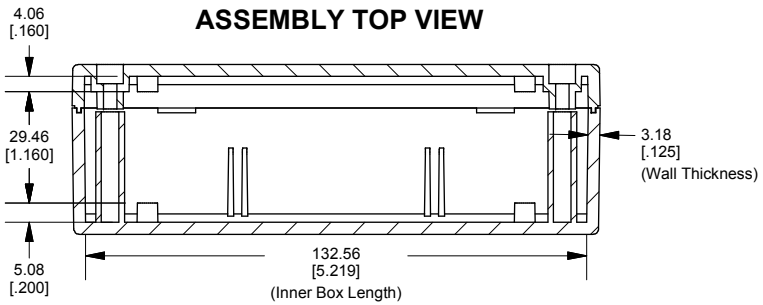

SECTION B-B

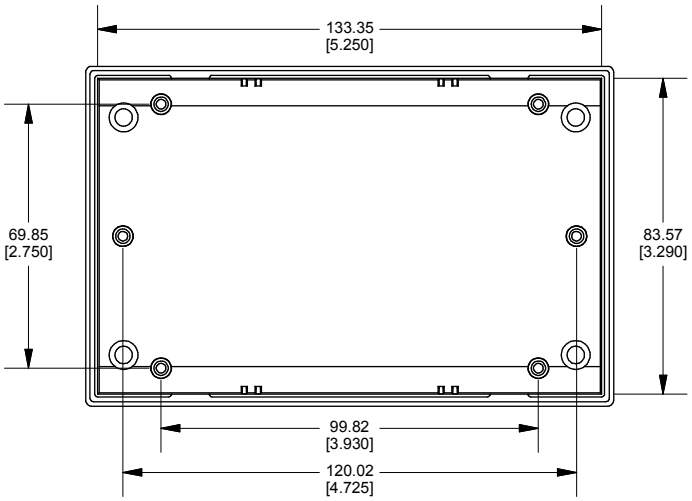

BOX INSIDE VIEW

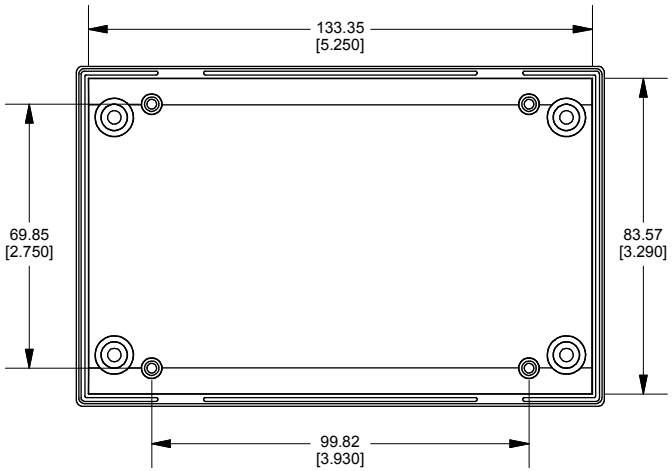

LID INSIDE VIEW

Enclosures can be Factory Modified (Milling, Drilling, Printing etc.)
Contact Factory mjm@hammondmfg.com for quotes
Solid models of this enclosure available in STEP or IGES.

NOTES
Purchased assembly includes Box & Lid and Cover Screws

1597X	
PART NUMBERS	
GREY ABS	1597X

HAMMOND MANUFACTURING™

1597X

www.hammondmfg.com