NOTES

MATERIAL	(ABS) FLAME RETARDANT UL94 V0 MATERIAL WITH BRASS INSERTS IN CORNER POSTS. (STYRENE) IS NON-FLAME RETARDANT WITHOUT BRASS INSERTS.
PARTS	(ABS) VERSION MACHINE SCREWS M3-0.5 x 18mm. REPLACEMENT PN 1594MS100 (100 / BAG). ABS VERSION MACHINE SCREWS FOR THE WATER RESISTANT BOX REPLACEMENT PN 1594WMS100 (STYRENE) VERSION SELF TAPPING #4 x 1.0". REPLACEMENT PN 1594TS100 (100 / BAG).
COLORS	(ABS) BLACK, GRAY (STYRENE) GRAY ONLY.

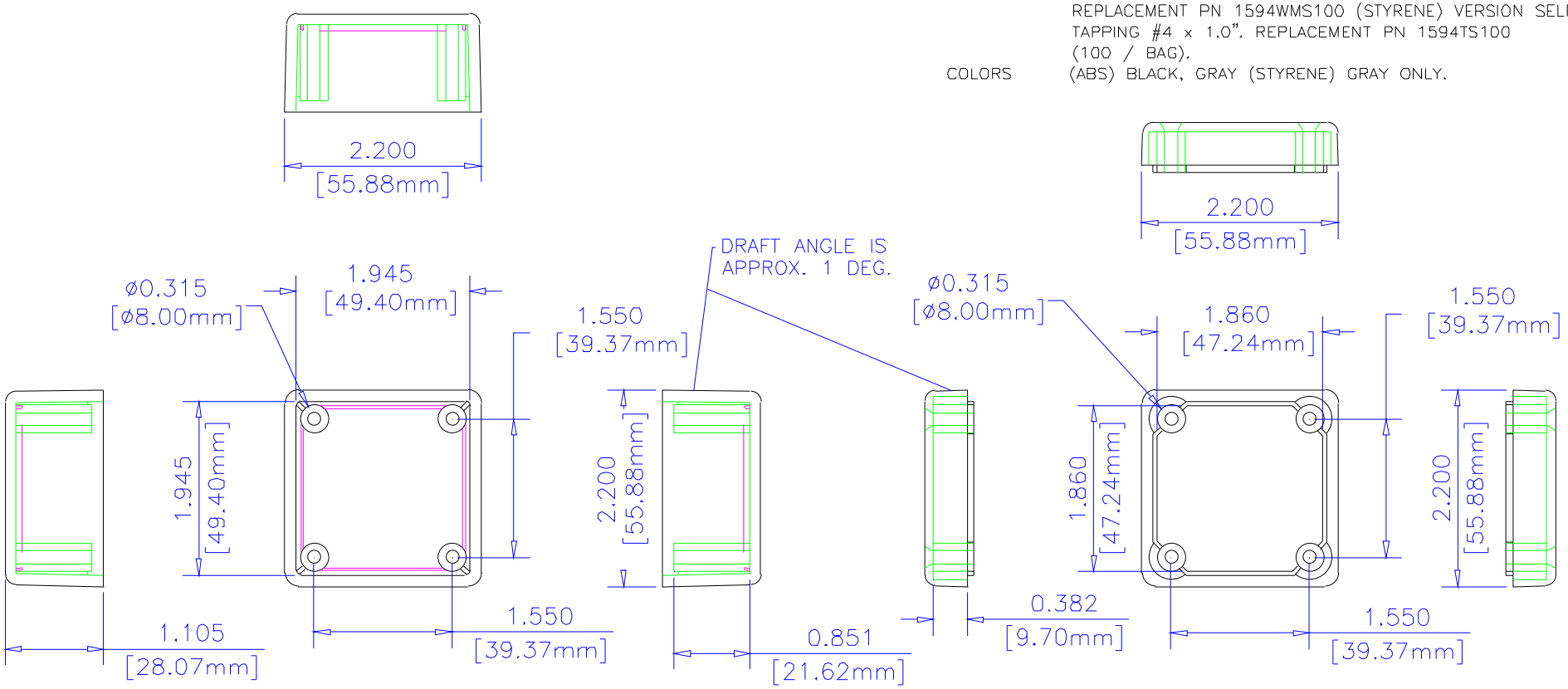

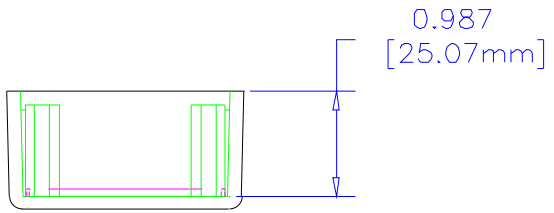

BOTTOM

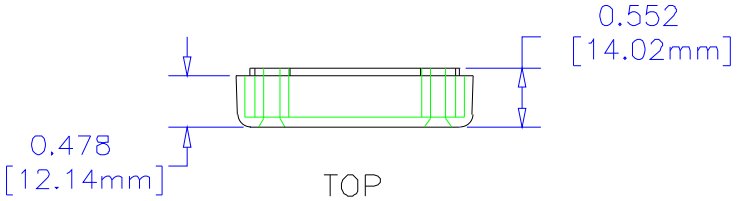

TOP

UNLESS OTHERWISE SPECIFIED DIMENSIONS ARE IN INCHES		HAMMOND MANUFACTURING	TITLE: HAMMOND 1594 SERIES PLASTIC ENCLOSURE
.X	+/- .1		DRAWN BY: MJM — DATE: 01/04/01
.XX	+/- .08		SCALE: — PAGE: 1 OF 1
.XXX	+/- .015		PART NUMBER: 1594A
CUTS	+/- .005		
ANGLES	+/- .5 DEG.		

NOTICE
HAMMOND CLAIMS PROPRIETARY RIGHTS TO THE MATERIAL ON THIS DRAWING. IT IS INTENDED TO BE USED AS A REFERENCE FOR ENGINEERING INFORMATION ONLY. THIS INFORMATION MAY NOT BE USED TO MANUFACTURE PRODUCT WITHOUT WRITTEN PERMISSION FROM HAMMOND MANUFACTURING.

WEB: WWW.HAMMONDMFG.COM

NOTES

MATERIAL	(ABS) FLAME RETARDANT UL94 V0 MATERIAL WITH BRASS INSERTS IN CORNER POSTS. (STYRENE) IS NON-FLAME RETARDANT WITHOUT BRASS INSERTS.
PARTS	(ABS) VERSION MACHINE SCREWS M3-0.5 x 18mm. REPLACEMENT PN 1594MS100 (100 / BAG). ABS VERSION MACHINE SCREWS FOR THE WATER RESISTANT BOX REPLACEMENT PN 1594WMS100 (STYRENE) VERSION SELF TAPPING #4 x 1.0". REPLACEMENT PN 1594TS100 (100 / BAG).
COLORS	(ABS) BLACK, GRAY (STYRENE) GRAY ONLY.

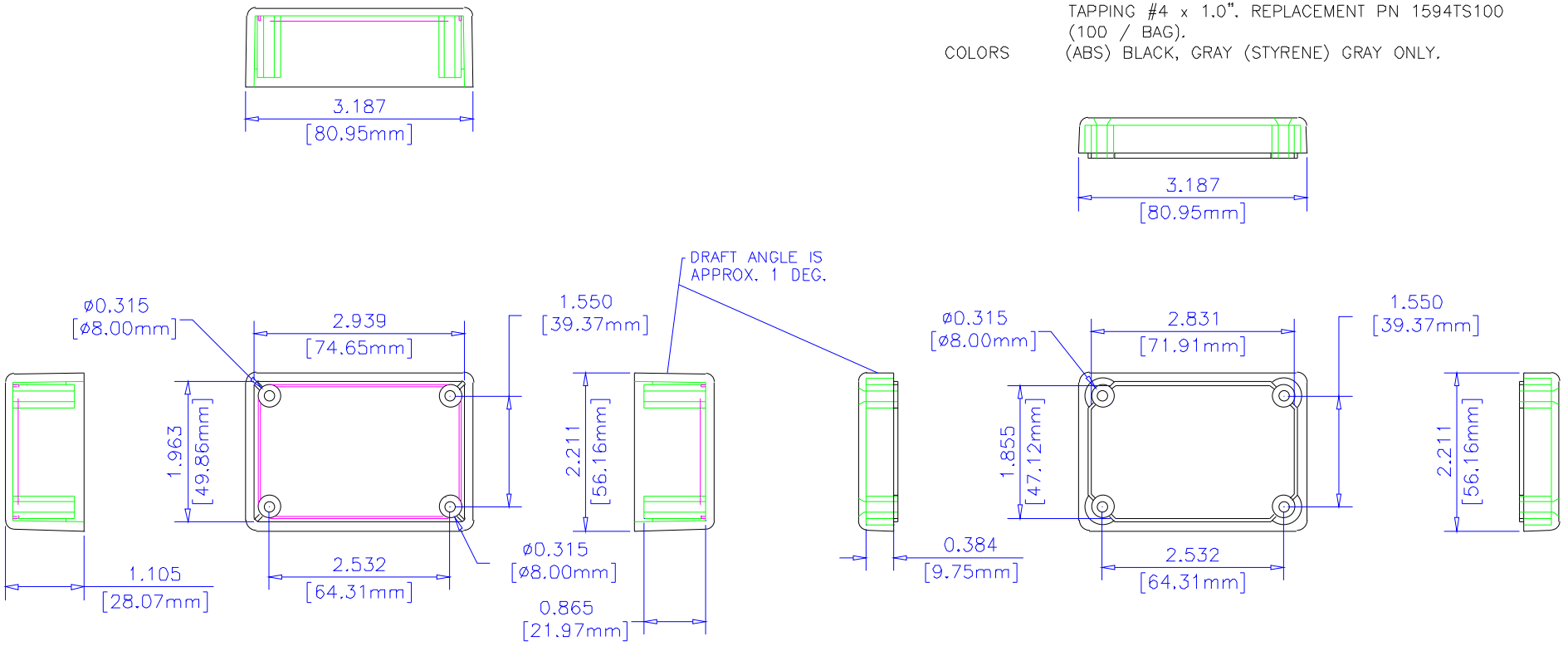

BOTTOM

TOP

UNLESS OTHERWISE SPECIFIED DIMENSIONS ARE IN INCHES

X	+/- .1
XX	+/- .06
XXX	+/- .015
CUTS	+/- .005
ANGLES	+/- .5 DEG.

NOTICE:
HAMMOND CLAIMS PROPRIETARY RIGHTS TO THE MATERIAL ON THE DRAWING. IT IS INTENDED TO BE USED AS A REFERENCE FOR ENGINEERING INFORMATION ONLY. THIS INFORMATION MAY NOT BE USED TO MANUFACTURE PRODUCT WITHOUT WRITTEN PERMISSION FROM HAMMOND MANUFACTURING

HAMMOND MANUFACTURING

WEB: WWW.HAMMONDMFG.COM

TITLE: HAMMOND 1594 SERIES PLASTIC ENCLOSURE

DRAWN BY	MJM
DATE	01/05/01
SCALE	
PAGE	1 OF 1
PART NUMBER	1594B

NOTES

MATERIAL	(ABS) FLAME RETARDANT UL94 V0 MATERIAL WITH BRASS INSERTS IN CORNER POSTS. (STYRENE) IS NON-FLAME RETARDANT WITHOUT BRASS INSERTS.
PARTS	(ABS) VERSION MACHINE SCREWS M3-0.5 x 18mm. REPLACEMENT PN 1594MS100 (100 / BAG). ABS VERSION MACHINE SCREWS FOR THE WATER RESISTANT BOX REPLACEMENT PN 1594WMS100 (STYRENE) VERSION SELF TAPPING #4 x 1.0". REPLACEMENT PN 1594TS100 (100 / BAG).
COLORS	(ABS) BLACK, GRAY (STYRENE) GRAY ONLY.

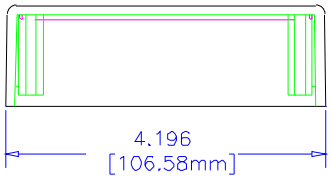

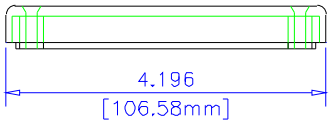

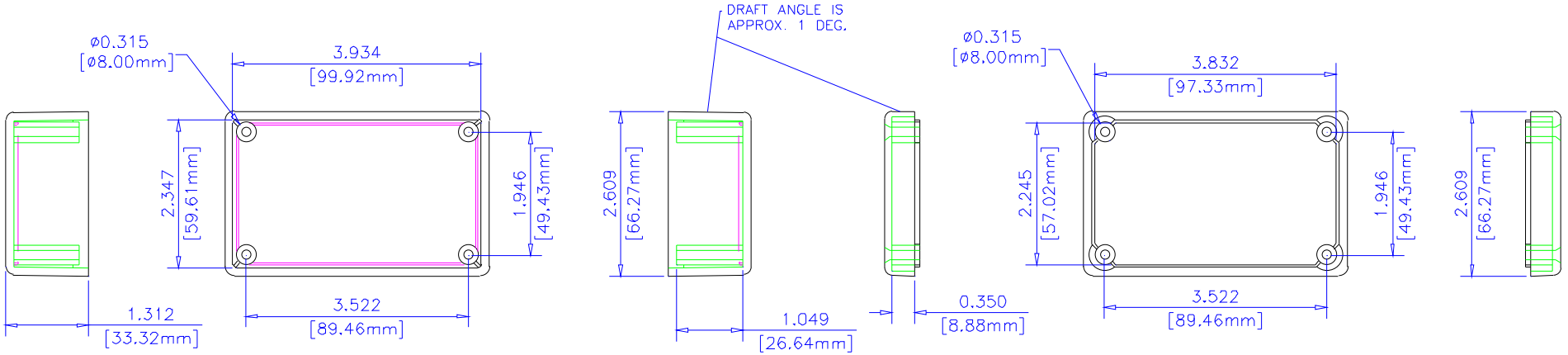

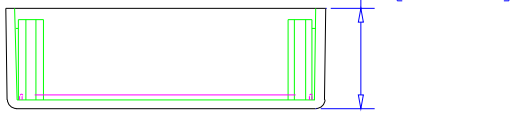

BOTTOM

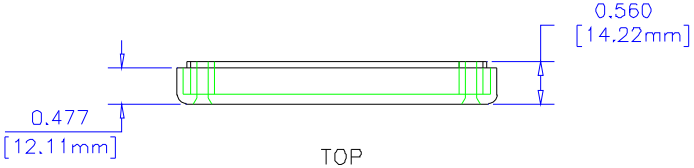

TOP

UNLESS OTHERWISE SPECIFIED DIMENSIONS ARE IN INCHES

.X	+/- .1
.XX	+/- .06
.XXX	+/- .015
CUTS	+/- .005
ANGLES	+/- .5 DEG.

NOTICE
HAMMOND CLAIMS PROPRIETARY RIGHTS TO THE MATERIAL ON THIS DRAWING. IT IS INTENDED TO BE USED AS A REFERENCE FOR ENGINEERING INFORMATION ONLY. THIS INFORMATION MAY NOT BE USED TO MANUFACTURE PRODUCT WITHOUT WRITTEN PERMISSION FROM HAMMOND MANUFACTURING.

HAMMOND MANUFACTURING

WEB: WWW.HAMMONDMFG.COM

TITLE: HAMMOND 1594 SERIES PLASTIC ENCLOSURE

DRAWN BY	MJM
DATE	01/06/01
SCALE	
PAGE	1 OF 1
PART NUMBER	1594C

NOTES

MATERIAL	(ABS) FLAME RETARDANT UL94 V0 MATERIAL WITH BRASS INSERTS IN CORNER POSTS. (STYRENE) IS NON-FLAME RETARDANT WITHOUT BRASS INSERTS.
PARTS	(ABS) VERSION MACHINE SCREWS M3-0.5 x 18mm. REPLACEMENT PN 1594MS100 (100 / BAG). ABS VERSION MACHINE SCREWS FOR THE WATER RESISTANT BOX REPLACEMENT PN 1594WMS100 (STYRENE) VERSION SELF TAPPING #4 x 1.0". REPLACEMENT PN 1594TS100 (100 / BAG).
COLORS	(ABS) BLACK, GRAY (STYRENE) GRAY ONLY.

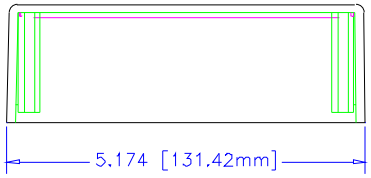

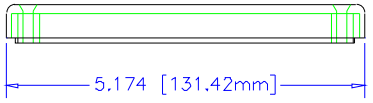

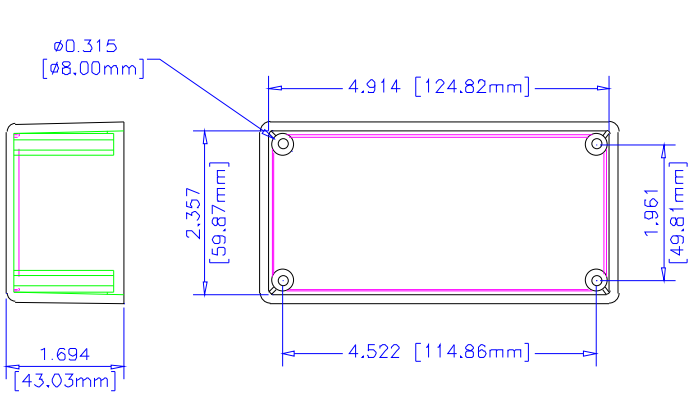

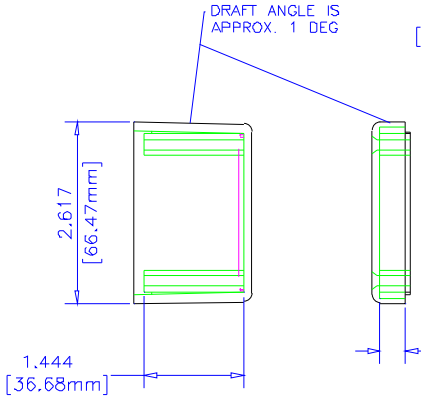

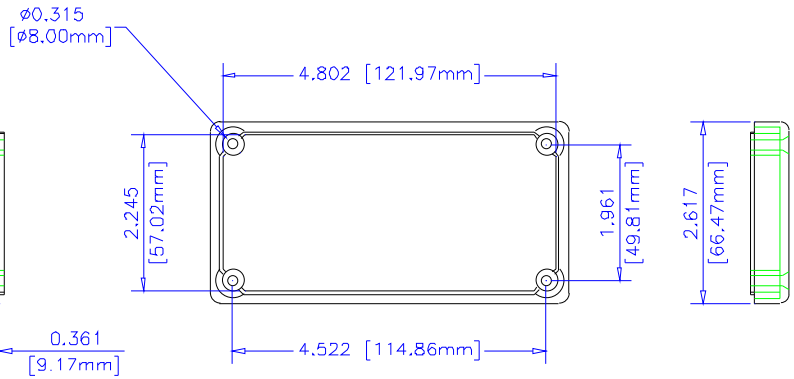

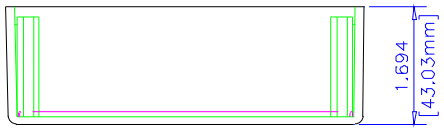

BOTTOM



TOP

UNLESS OTHERWISE SPECIFIED DIMENSIONS ARE IN INCHES		HAMMOND MANUFACTURING	TITLE: HAMMOND 1594 SERIES PLASTIC ENCLOSURE
X	+/- .1		DRAWN BY: MJM — DATE: 01/07/01
XX	+/- .08		SCALE: — PAGE: 1 OF 1
XXX	+/- .015		PART NUMBER: 1594D
CUTS	+/- .005		
ANGLES	+/- .5 DEG.		

NOTICE
HAMMOND CLAIMS PROPRIETARY RIGHTS TO THE MATERIAL ON THIS DRAWING. IT IS INTENDED TO BE USED AS A REFERENCE FOR ENGINEERING INFORMATION ONLY. THIS INFORMATION MAY NOT BE USED TO MANUFACTURE PRODUCT WITHOUT WRITTEN PERMISSION FROM HAMMOND MANUFACTURING

WEB: WWW.HAMMONDMFG.COM

NOTES

MATERIAL	(ABS) FLAME RETARDANT UL94 V0 MATERIAL WITH BRASS INSERTS IN CORNER POSTS. (STYRENE) IS NON-FLAME RETARDANT WITHOUT BRASS INSERTS.
PARTS	(ABS) VERSION MACHINE SCREWS M3-0.5 x 18mm. REPLACEMENT PN 1594MS100 (100 / BAG). ABS VERSION MACHINE SCREWS FOR THE WATER RESISTANT BOX REPLACEMENT PN 1594WMS100 (STYRENE) VERSION SELF TAPPING #4 x 1.0". REPLACEMENT PN 1594TS100 (100 / BAG).
COLORS	(ABS) BLACK, GRAY (STYRENE) GRAY ONLY.

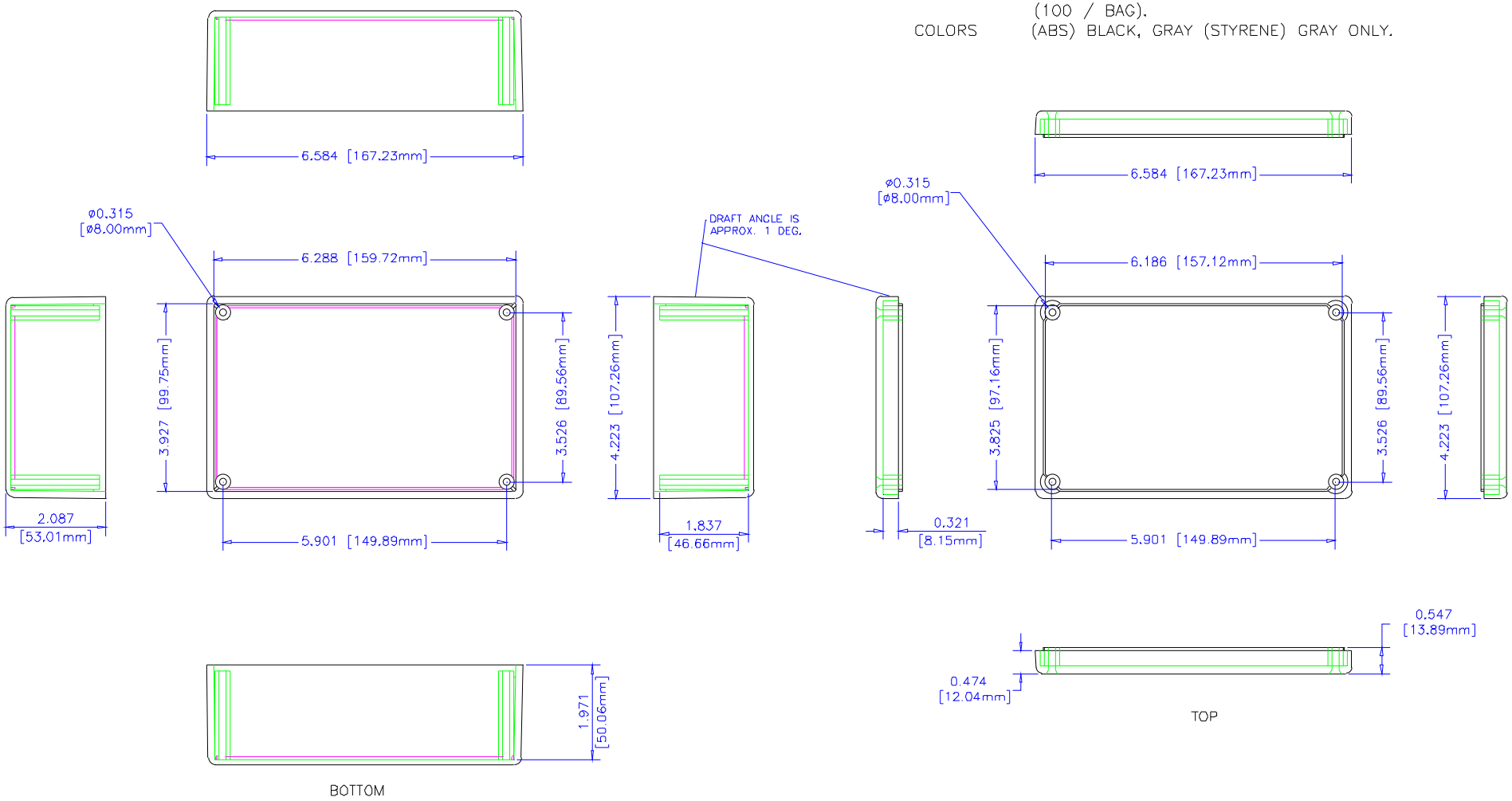

BOTTOM

TOP

UNLESS OTHERWISE SPECIFIED DIMENSIONS ARE IN INCHES

X	+/- 1
XX	+/- 05
XXX	+/- .015
CUTS	+/- 005
ANGLES	+/- 5 DEG.

NOTICE

HAMMOND CLAIMS PROPRIETARY RIGHTS TO THE MATERIAL ON THIS DRAWING. IT IS INTENDED TO BE USED AS A REFERENCE FOR ENGINEERING INFORMATION ONLY. THIS INFORMATION MAY NOT BE USED TO MANUFACTURE PRODUCT WITHOUT WRITTEN PERMISSION FROM HAMMOND MANUFACTURING.

HAMMOND MANUFACTURING

WEB. WWW.HAMMONDMFG.COM

TITLE: HAMMOND 1594 SERIES PLASTIC ENCLOSURE

DRAWN BY	MJM
DATE	01/08/01
SCALE	
PAGE	1 OF 1
PART NUMBER	1594E