Heavy Duty - ABS (1594 Series)

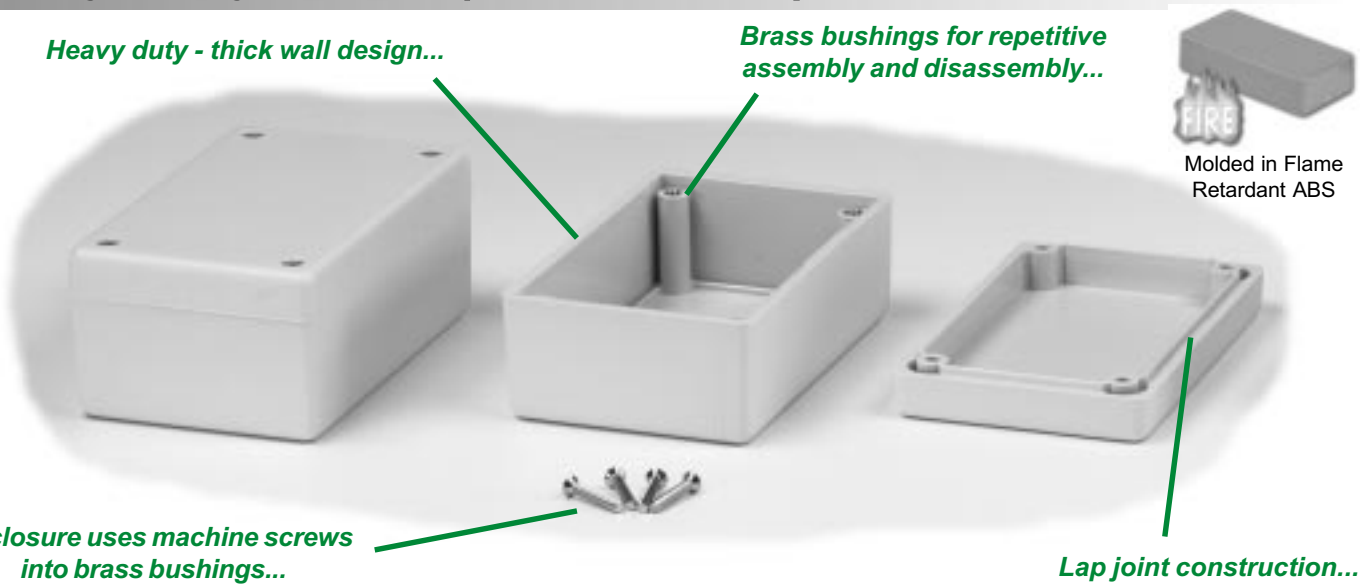

OTHER KEY FEATURES

- Rugged electronic instrument enclosures, designed for mounting printed circuit boards. Heavy duty with an average wall thickness of .12" (3.1 mm)
- Molded in flame retardant ABS plastic (material carries a UL flammability rating of 94V-0).
- Designed to meet IP54, watertight version meets IP65.
- Countersunk lid is secured with four M3 x 0.5" x 0.71" (18 mm) Philips machine screws threaded into tapped integral brass bushings.
- Stocked in black and grey with matte textured finish.
- Watertight version has a silicon rubber seal.

ACCESSORIES

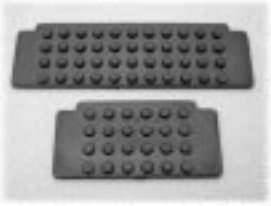

P.C. Board Card Guides

Allow for vertical or horizontal mounting of P.C. board. Each part number contains either 25 or 5 "sets". Each "set" includes four adaptors (2 - for the short side, 2 - for the long side). Molded from black ABS plastic.



Belt or Pocket Clip

Molded from tough nylon, includes 2 nylon screws and mounting template.
Black - **1599CLIP** Grey - **1599CLIPGY**



Replacement Screws

Machine screw, used in flame retardant ABS 1594 series (ie...with brass inserts).
M3 - 0.5 x 20 mm
1594MS100 - Package of 100
1594WMS100 - Package of 100 (for watertight version).

Use with part number	Accessories					
	PC Card Guides		Belt or Pocket Clip		Replacement screws (100 per bag)	Replacement screws for watertight (100 per bag)
	(25 sets of 4)	(5 sets of 4)	Black	Grey		
1594A	1594AZ25	1594AD5	1599CLIP	1599CLIPGY	1594MS100	1594WMS100
1594B	1594BZ25	1594BD5	1599CLIP	1599CLIPGY	1594MS100	1594WMS100
1594C	1594CZ25	1594CD5	1599CLIP	1599CLIPGY	1594MS100	1594WMS100
1594D	1594DZ25	1594DD5	1599CLIP	1599CLIPGY	1594MS100	1594WMS100
1594E	1594EZ25	1594ED5	1599CLIP	1599CLIPGY	1594MS100	1594WMS100

©
CANADA
Guelph, Ontario (519) 822-2960
St. Laurent, Quebec (514) 343-9010
USA
Cheektowaga, NY (716) 651-0086
www.hammondmfg.com
EUROPE
Basingstoke, UK +44 1256 812812
AUSTRALASIA
Queenstown, SA, Australia +61 8 8240 2244

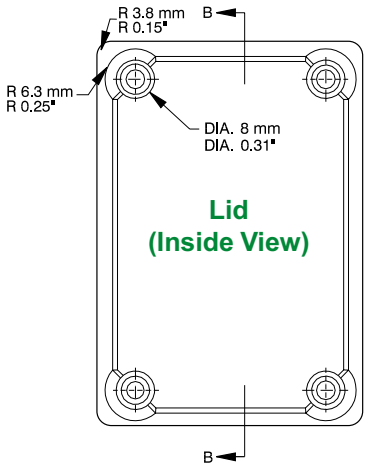

Lid
(Inside View)

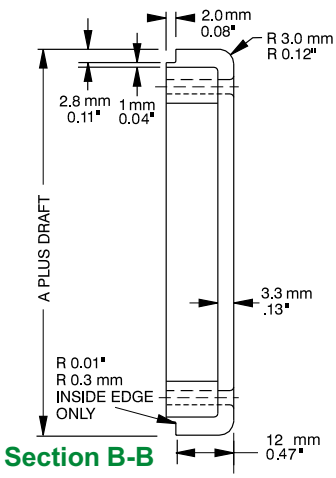

Section B-B

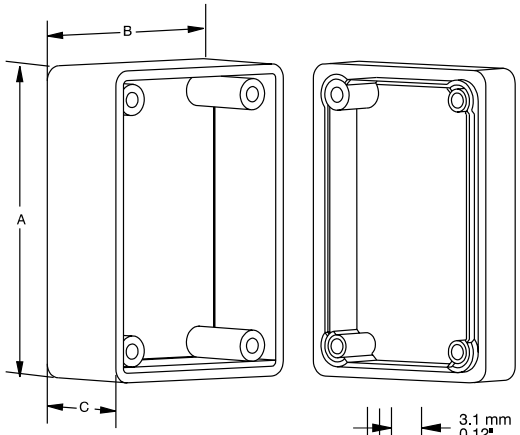

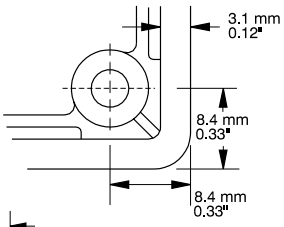

Detail B
Typical 4 Corners

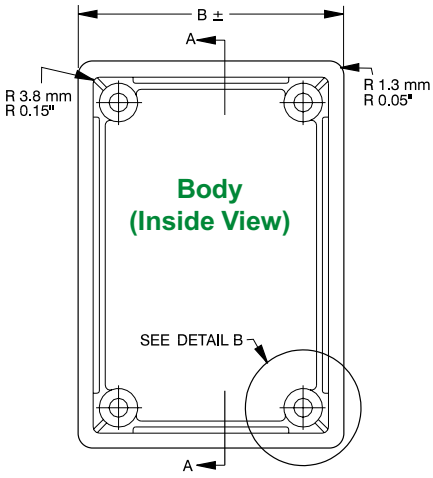

Body
(Inside View)

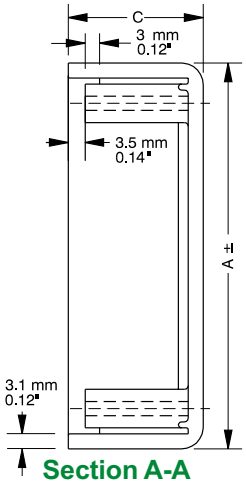

Section A-A

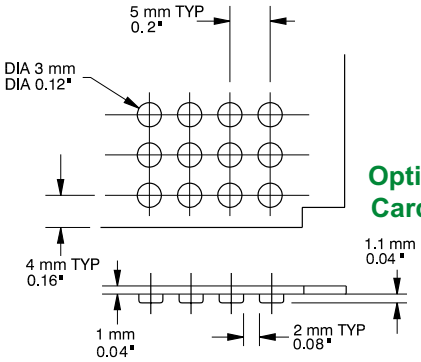

Optional P.C.
Card Guides

Part Number				Units	Dimensions			
Black	Grey	Black Shielded	Black Watertight		A	B	C	Assembled Height
1594ABK	1594AGY	1594RABK	1594AWBK	inch	2.2	2.2	1.1	1.6
				mm	56	56	28	40
1594BBK	1594BGY	1594RBBK	1594BWBK	inch	3.2	2.2	1.1	1.6
				mm	81	56	28	40
1594CBK	1594CGY	1594RCBK	1594CWBK	inch	4.1	2.6	1.3	1.8
				mm	105	66	33	45
1594DBK	1594DGY	1594RDBK	1594DWBK	inch	5.2	2.6	1.7	2.2
				mm	131	66	43	55
1594EBK	1594EGY	1594REBK	1594EWBK	inch	6.6	4.2	2.1	2.6
				mm	167	107	53	65

NOTES: - Assembled height = dimension "C" + 0.47" (12.0 mm)
- Average wall thickness: 0.12" (3.1 mm)

For detailed drawings, CAD files and color photos visit our website at:
www.hammondmfg.com



