Enclosures can be Factory Modified (Milling, Drilling, Printing etc.)
Contact Factory mjm@hammondmfg.com for quotes

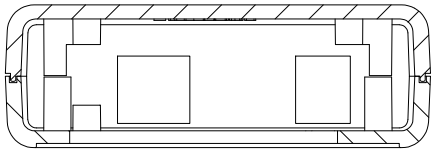

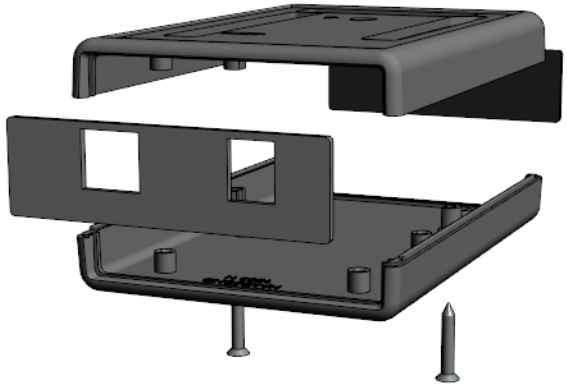

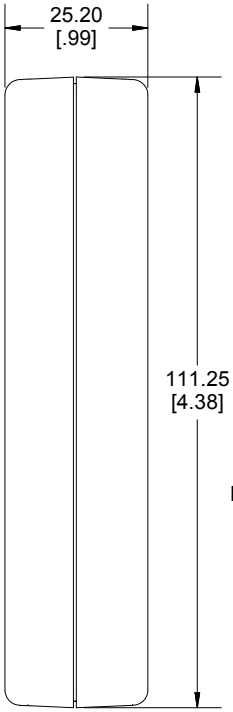

SECTION B-B

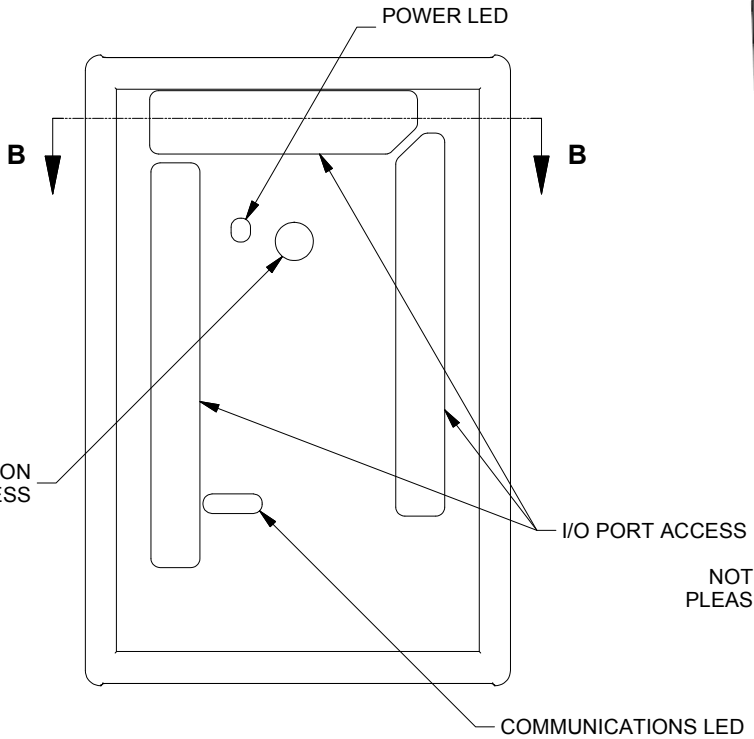

NOTE: 1593MEG ENCLOSURE IS BASED ON HAMMOND STANDARD 1593N
PLEASE SEE 1593N DRAWING FOR STANDARD ENCLOSURE SPECIFICATIONS

NOTE
Purchased assembly includes top and bottom cover, front and rear end panels, 2 cover screws, and 1 black rubber foot (P.C. Board not included) Enclosure molded from ABS Plastic.

ASSEMBLY - VIEW FROM TOP SIDE

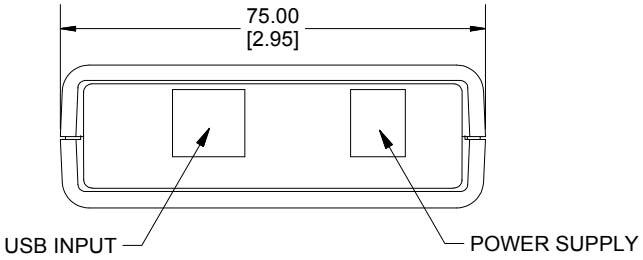

PART NUMBERS	
1593HAMMEG Enclosure	
Black Enclosure	1593HAMMEGBK
Grey Enclosure	1593HAMMEGGY
Translucent Blue Enclosure	1593HAMMEGTBU

Dimensions:
mm
[inches]

HAMMOND MANUFACTURING™

1593HAMMEG

www.hammondmfg.com