# 1591XXTFL Enclosure

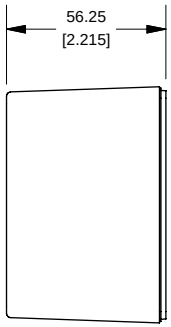


SIDE VIEW OF BOX

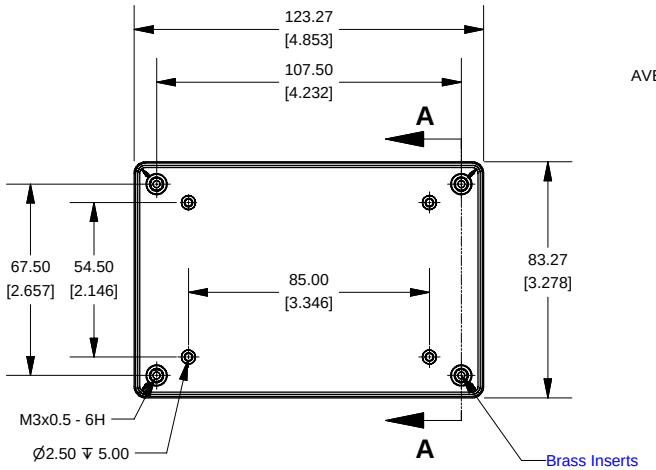


TOP VIEW OF BOX

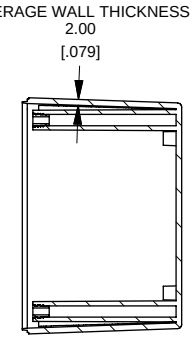


SECTION A-A



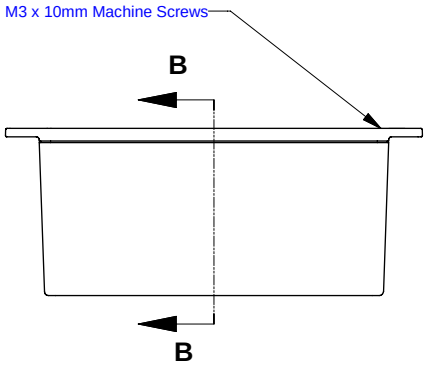


SIDE VIEW OF ENCLOSURE

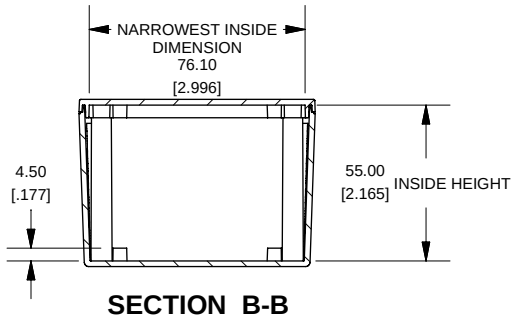


SECTION B-B

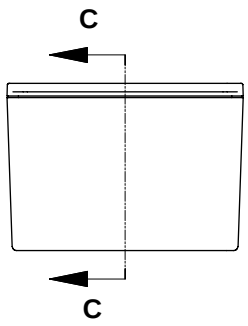


END VIEW OF ENCLOSURE

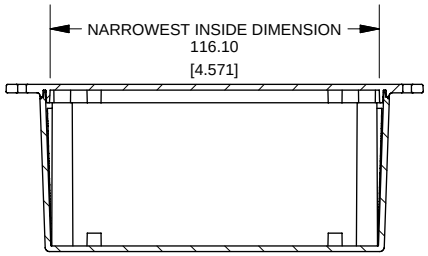


SECTION C-C

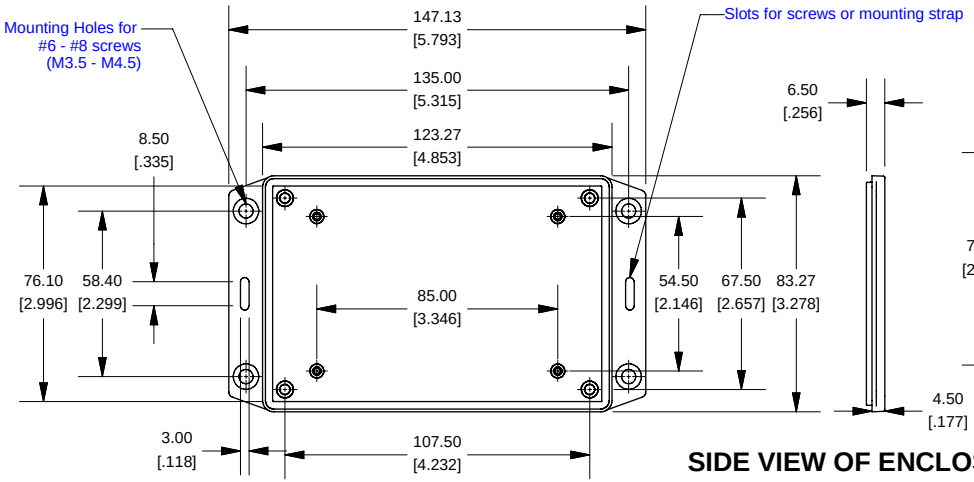


BOTTOM VIEW OF LID

SIDE VIEW OF ENCLOSURE

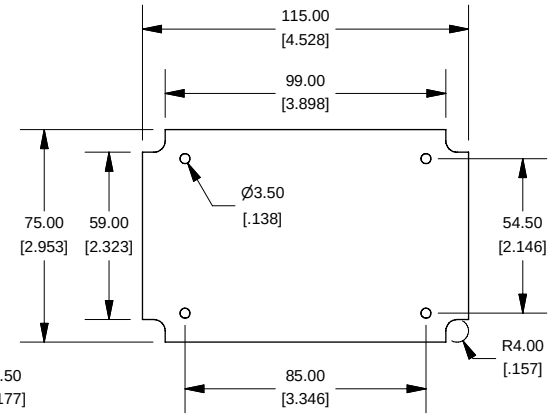


Max Size PCB. Fits in Box or in Lid.
Not supplied with Enclosure

Note:

Enclosures available modified, Milling, Drilling, Silk Screening.
Solid models of this enclosure available in STEP or IGES.
Contact Factory mjm@hammondmfg.com

| NOTE |
|---|
| Enclosure molded from FRABS UL 94-V0 Plastic. Other materials / Colours Available Consult Factory |

| 1591XXTFL | |
|---|---|
| 1590XXT Flanged Lid Enclosure | |
| Black Enclosure Cover Screws (Pkg 100) | 1591XXTFLBK |
| Gray Enclosure - RAL 7035 | 1591XXTFLGY |
| ACCESSORIES | |
| Black Enclosure Cover Screws (Pkg 100) | 1591MS100BK |
| Gray Enclosure Cover Screws (Pkg 100) | 1591MS100 |
| P.C. Board Screws (All Boxes) | |
| P.C. Board Screws [#4 x 1/4" self-tapping (6.4mm)] | 1593ATS50 (Pkg 50) 1593ATS100 (Pkg 100) |

HAMMOND MANUFACTURING™

www.hammondmfg.com