1591LFL Enclosure

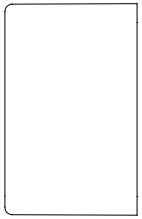

SIDE VIEW OF BOX

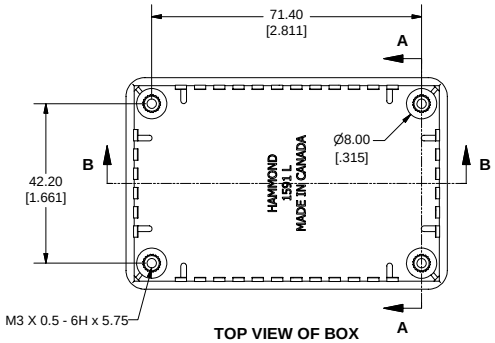

TOP VIEW OF BOX

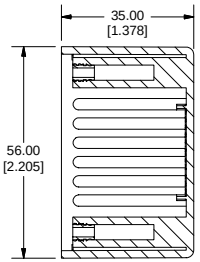

SECTION A-A

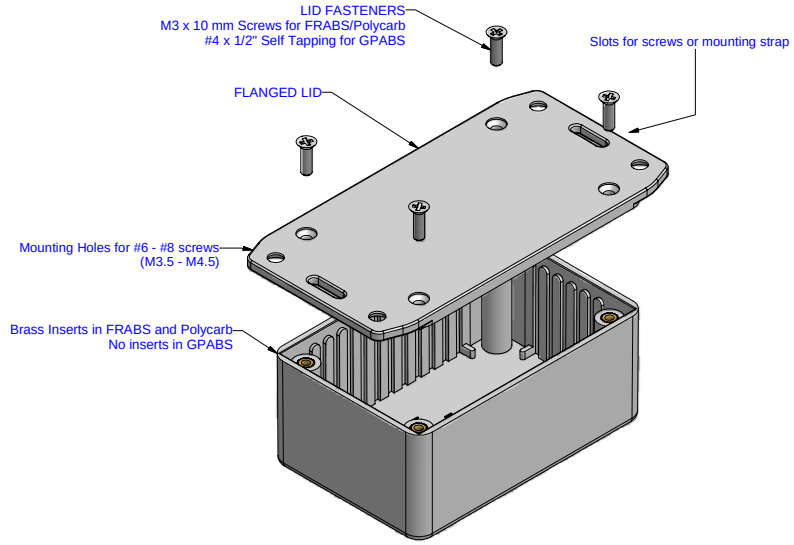

EXPLODED VIEW OF ASSEMBLY

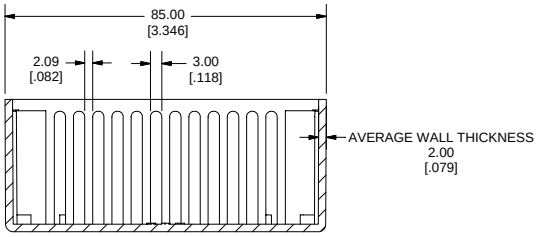

SECTION B-B

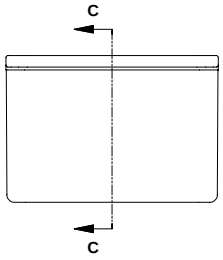

END VIEW OF ENCLOSURE

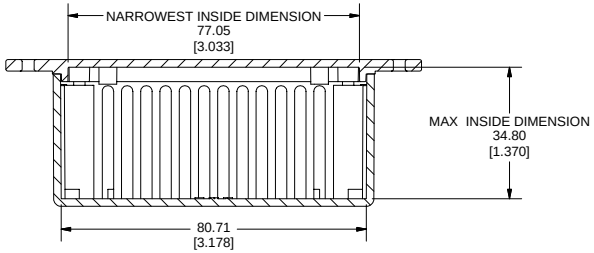

SECTION C-C

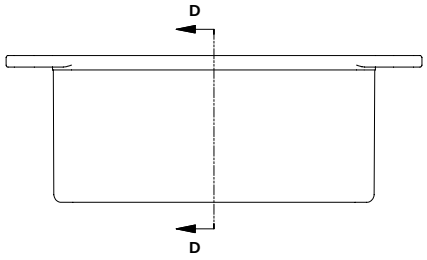

SIDE VIEW OF ENCLOSURE

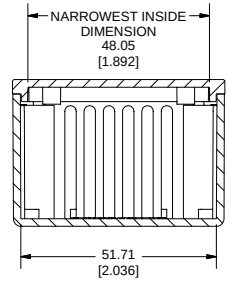

SECTION D-D

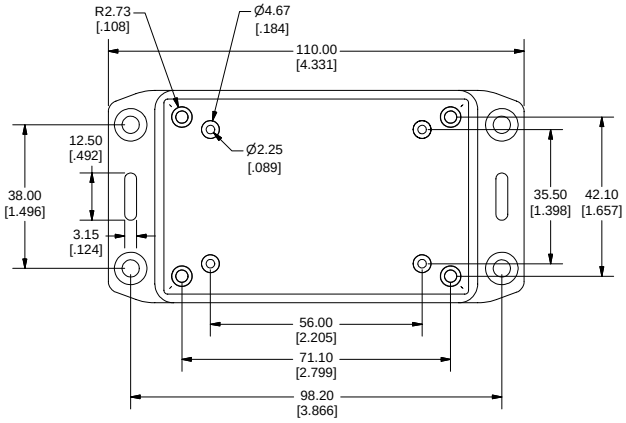

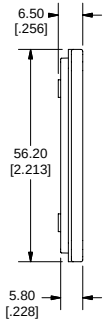

Note:

Enclosures can be Factory Modified (Milling, Drilling, Printing etc.)
Solid models of this enclosure available in STEP or IGES Format.
Contact Factory mjm@hammondmfg.com

PART NUMBERS		
1591L Flanged Lid Enclosures		
Material	**Colour**	**Part Number**
FRABS UL94 - V0	Black	1591LFLBK
	Grey	1591LFLGY
Accessories		
	Description	**Part Number**
Used with ABS Enclosures	PC Board Card Adapters	See Accessories Section
	Replacement Screws, Flat Head Phillips Nickel Plated Pack of 100,	1591MS100 1591MS100BK (Black)
Recomended Torque on Fasteners (no lubrication)		
	M3 - 0.5 x 10mm Screws #4 x 0.5 Screws	30-40 cN*m 30-40 cN*m

HAMMOND MANUFACTURING™

www.hammondmfg.com