1591G

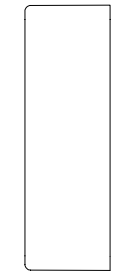

SIDE VIEW OF BOX

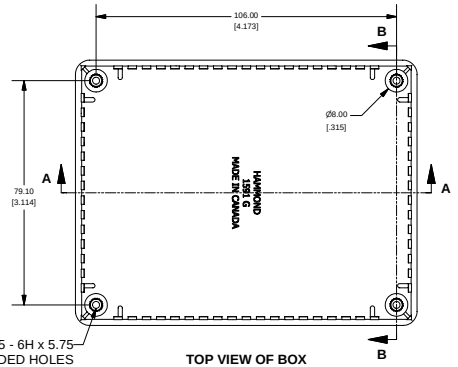

TOP VIEW OF BOX

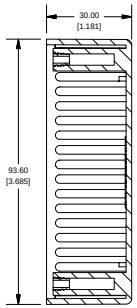

SECTION B-B
SCALE 3 / 4

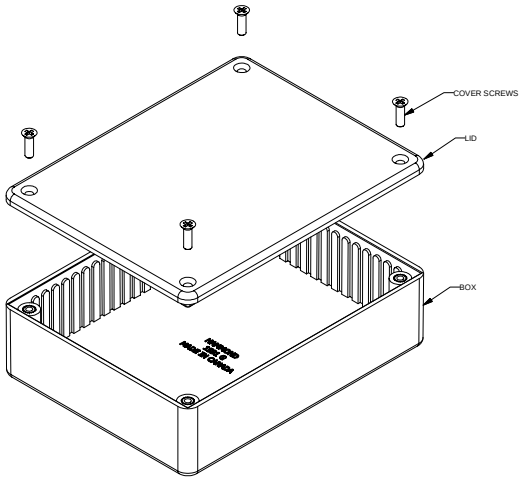

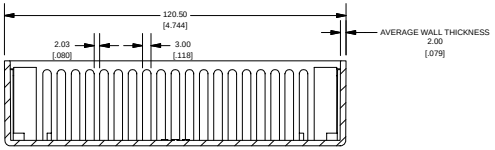

SECTION A-A
SCALE 3 / 4

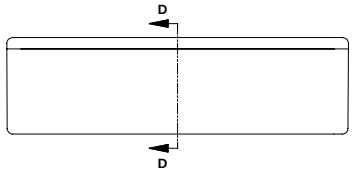

SIDE VIEW OF ASSEMBLY

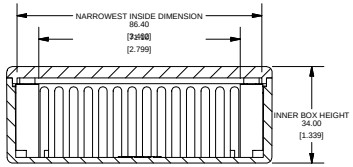

SECTION D-D
SCALE 3 / 4

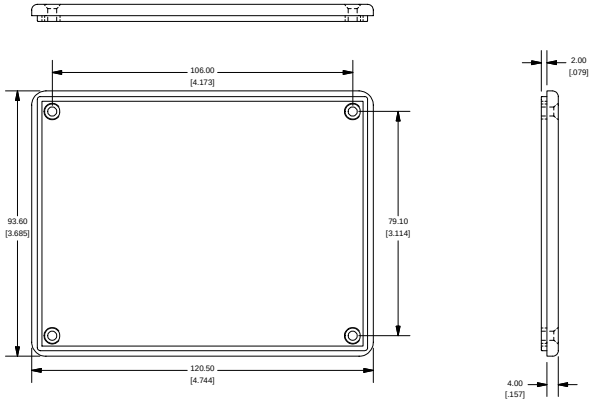

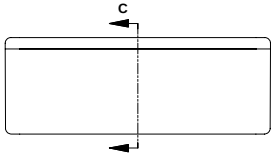

END VIEW OF ASSEMBLY

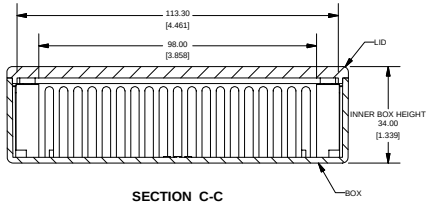

SECTION C-C
SCALE 3 / 4

PART NUMBERS		
1591G Enclosures		
Material	**Colour**	**Part Number**
ABS	Beige	1591GBG
	Black	1591GBK
	Blue	1591GBU
	Grey	1591GGY
	Black Shielded	1591RGBK
GP ABS	Black	1591GSBK
Translucent Polycarbonate	Ice Blue	1591GTBU
	IR Red	1591GTRD
	Crystal Clear	1591GTCL
Accessories		
	Description	**Part Number**
Used with ABS and Translucent Polycarbonate Enclosures	PC Board Card Adapters	See Accessories Section
	Flange Kits	See Accessories Section
	Replacement Screws, nickel plated M3 - 0.5 x 10mm, Pack of 100,	1591MS100 1591MS100BK (Black)
	Belt/Pocket Clip, w/ nylon screws (insulated to avoid interference) and mounting template	1599CLIP - Black 1599CLIPGY - Grey
	Clear Lids - clear, flame retardant polycarbonate - Lid ONLY	1591GC
Used with GP ABS Enclosure	PC Board Card Adapters	See Accessories Section
	Flange Kits	See Accessories Section
	Belt/Pocket Clip, w/ nylon screws (insulated to avoid interference) and mounting template	1599CLIP - Black 1599CLIPGY - Grey
	Replacement Screws, self tapping, black oxide, #4 x 0.5, Pack of 100	1591TS100BK
	Clear Lids - clear, flame retardant polycarbonate - Lid ONLY	1591GC
Required Torque on Fasteners (no lubrication)		
	M3 - 0.5 x 10mm Screws	30-40 cN*m
	#4 x 0.5 Screws	30-40 cN*m

HAMMOND MANUFACTURING

www.hammondmfg.com