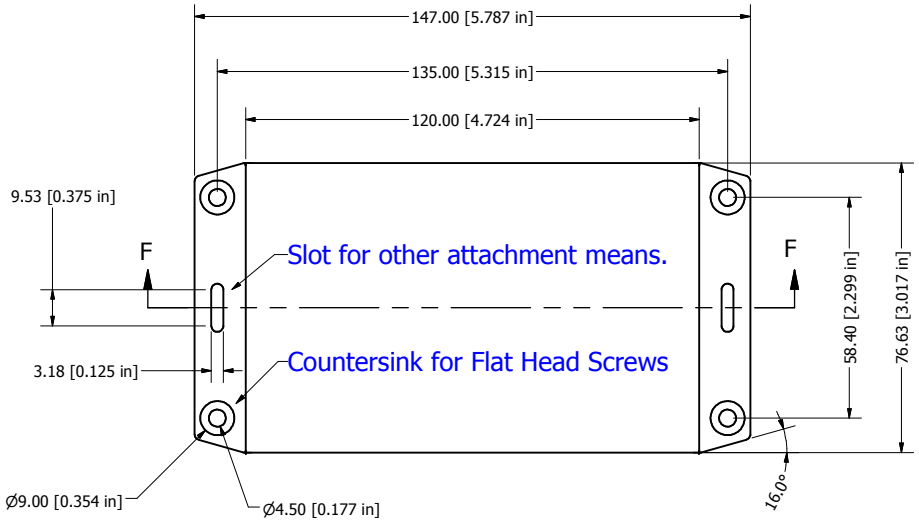

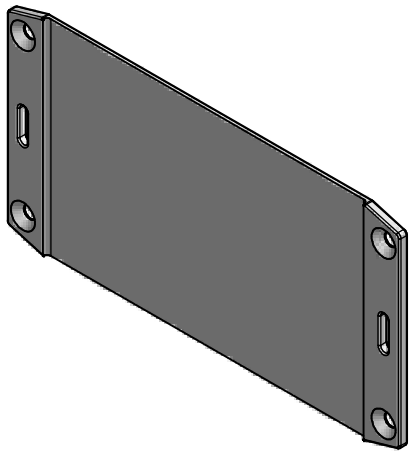

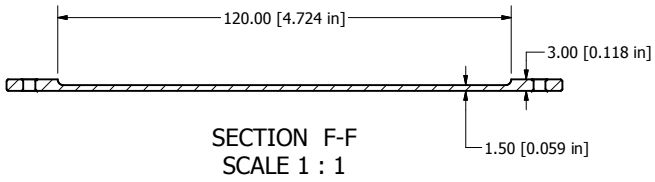

SECTION F-F
SCALE 1 : 1

1591T Flange
Material - ABS Plastic UL94-V0 rating
Black and Grey stocked. 1591FTBK, 1591FTGY
Designed to fit 1591T Enclosures
Attach with ABS Cement or mechanical means.

HAMMOND MANUFACTURING™

1591FT

www.hammondmfg.com

Mouser Electronics

Authorized Distributor

Click to View Pricing, Inventory, Delivery & Lifecycle Information:

Hammond:

1591FTBK 1591FTGY