OR

Flange kits mount to the rear of our 1591 series (using glue)...

Three sizes cover our entire 1591 series...

Flange kits can be screwed to the lid of our 1591 series...

Flange slots allow for easy cable tie hanging...

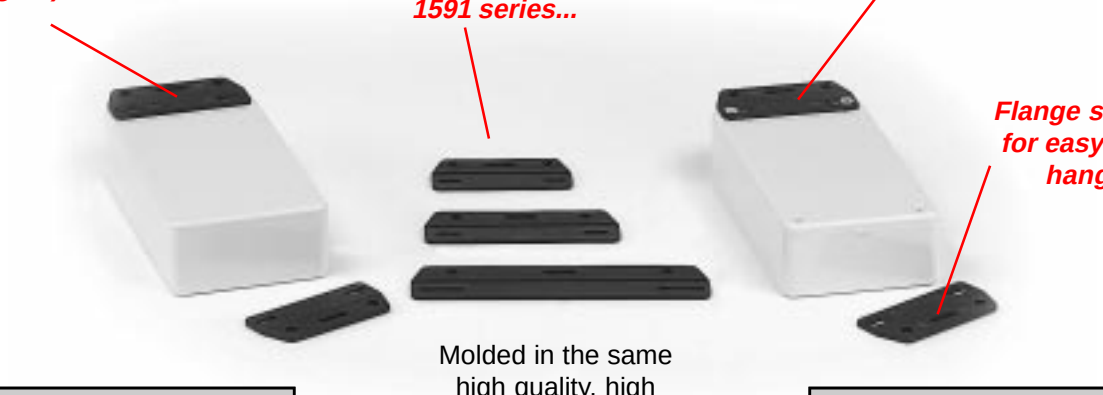

Molded in the same high quality, high strength, fire retardant ABS plastic (black only) as our 1591 series (Catalog SC-5B).

Used with Enclosure	Box mounted flange Part Number
1591L	**1591F1BK-10**
1591A	**1591F1BK-10**
1591B	**1591F1BK-10**
1591C	**1591F1BK-10**
1591D	**1591F2BK-10**
1591E	**1591F3BK-10**
1591G	**1591F2BK-10**
1591H	**1591F1BK-10**
1591S	**1591F2BK-10**
1591T	**1591F2BK-10**
1591U	**1591F3BK-10**
1591V	**1591F3BK-10**

SOLD IN PACKS OF 10

NOTE: When gluing flanges to ABS plastic boxes we recommend standard ABS cement. To glue flanges to our styrene enclosures we recommend a faster setting glue like Loctite's "Quick Tite"

Used with Enclosure	Lid mounted flange Part Number
1591L	**1591F1BK-10**
1591A	**1591F1BK-10**
1591B	**1591F1BK-10**
1591C	**1591F2BK-10**
1591D	**1591F2BK-10**
1591E	**1591F3BK-10**
1591G	**1591F3BK-10**
1591H	**1591F2BK-10**
1591S	**1591F3BK-10**
1591T	**1591F2BK-10**
1591U	**1591F3BK-10**
1591V	**1591F3BK-10**

SOLD IN PACKS OF 10

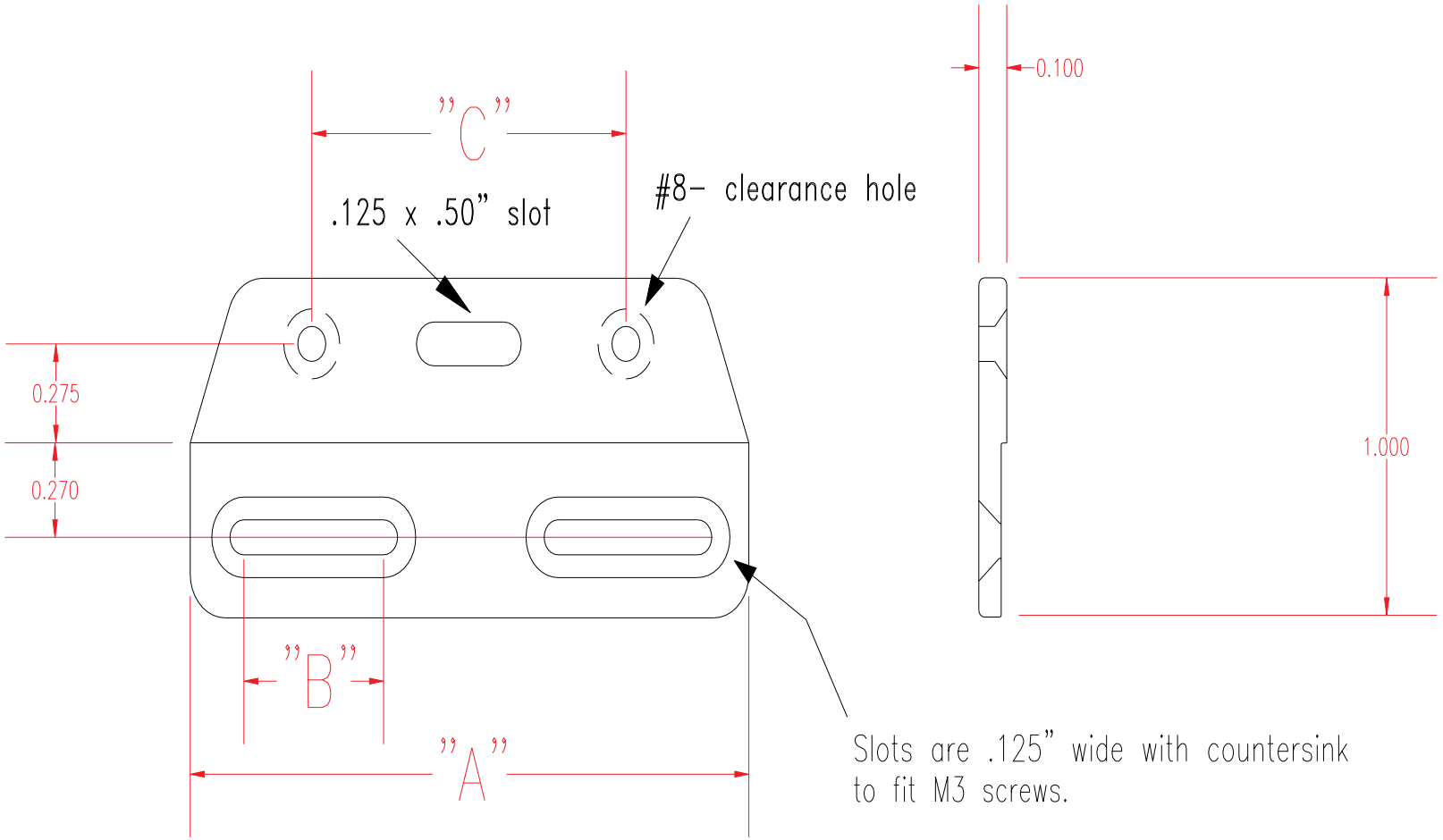

Flanges are available Bulk packed "-BULK"
Flanges are available in packages of 10 pieces "-10"

Part Number	Dimensions (inches)		
	A	B	C
1591F1	2.2	.25	1.5
1591F2	3.0	.26	2.0
1591F3	4.5	.60	3.25

Stocked Colour is Black, Standard Hammond Colours available on special order.
Material is FRABS Plastic.