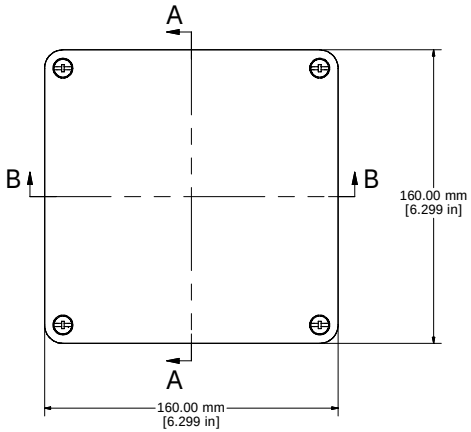

ASSEMBLY

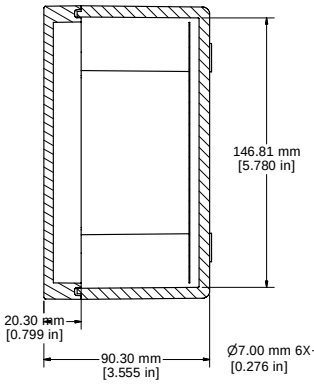

SECTION A-A

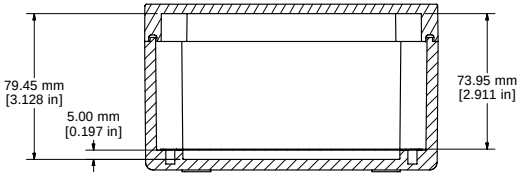

SECTION B-B

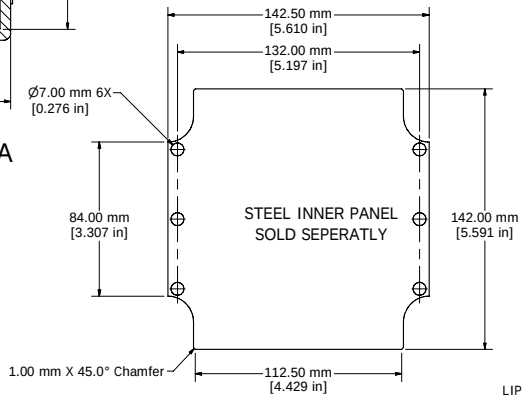

INNER PANEL

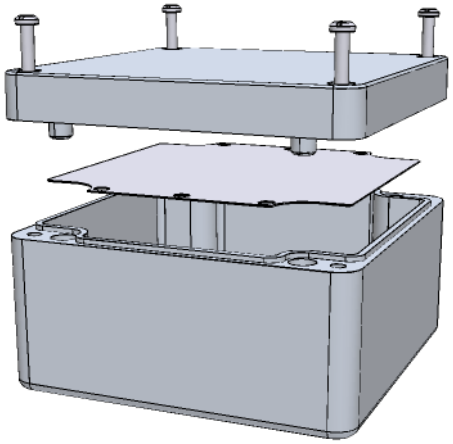

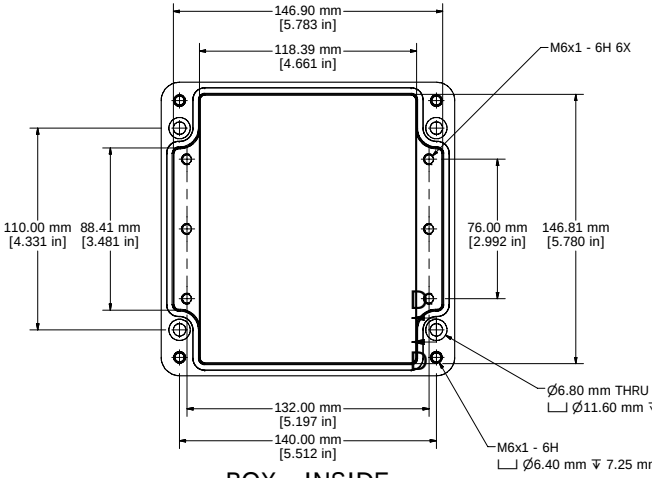

BOX - INSIDE

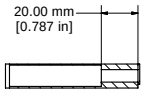

SECTION D-D

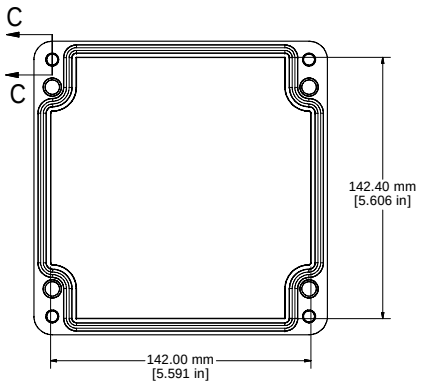

LID - INSIDE

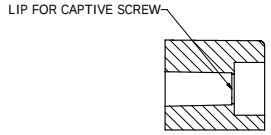

SECTION C-C

c UL us LISTED
File #E65324
NEMA 4, 4X

FIBERGLASS ENCLOSURE	
INCLUDES	
1	ENCLOSURE
4	M6 x 28mm PAN HEAD SCREWS
ACCESSORIES	
STEEL INNER PANEL	1590ZGRP161PL

HAMMOND MANUFACTURING™

1590ZGRP161

www.hammondmfg.com