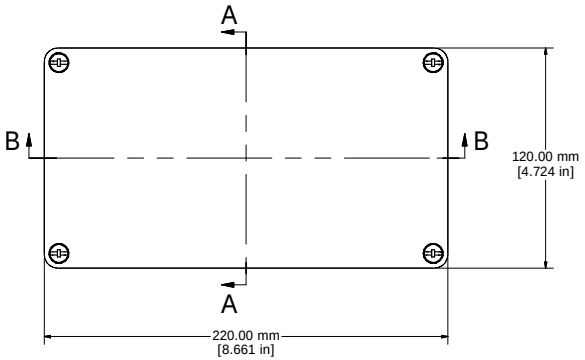

ASSEMBLY

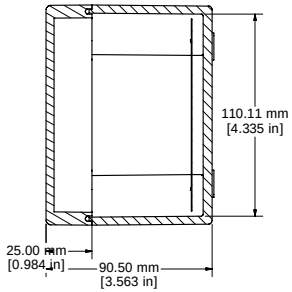

SECTION A-A

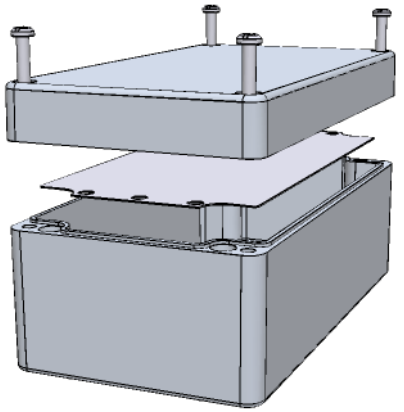

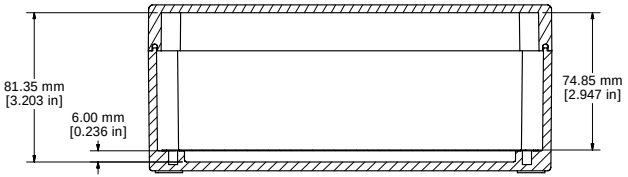

SECTION B-B

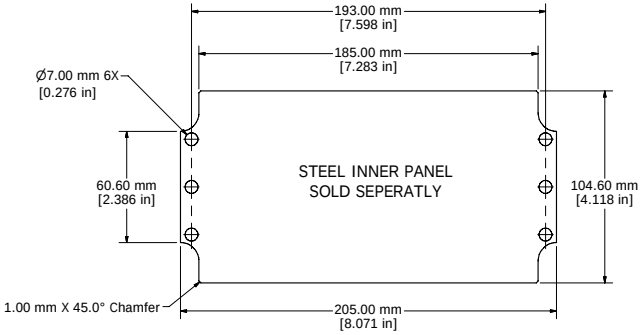

INNER PANEL

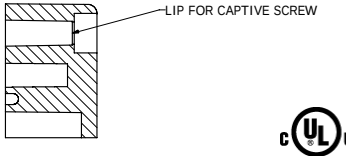

SECTION C-C

c UL us LISTED
File #E65324
NEMA 4, 4X

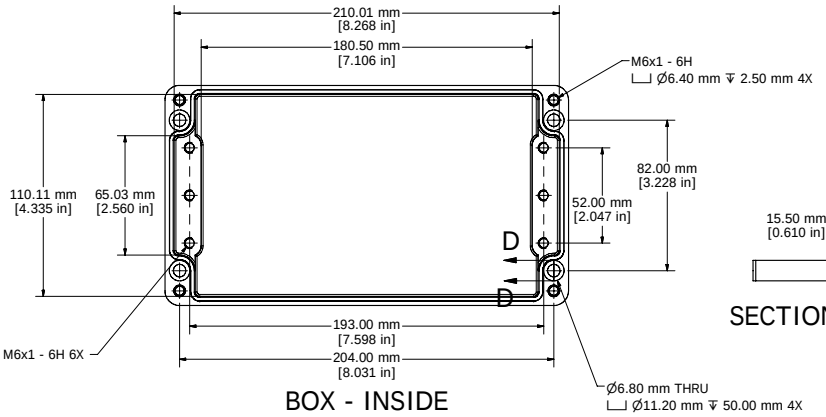

BOX - INSIDE

SECTION D-D

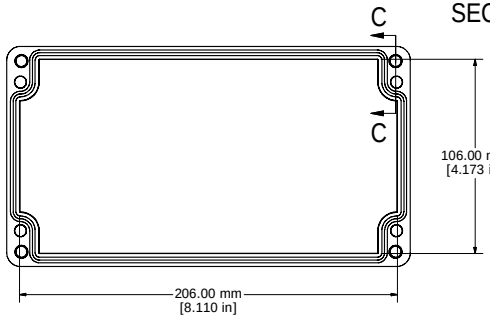

LID - INSIDE

FIBERGLASS ENCLOSURE	
INCLUDES	
1	ENCLOSURE
4	M5 x 30mm PAN HEAD SCREWS
ACCESSORIES	
STEEL INNER PANEL	1590ZGRP123PL

HAMMOND MANUFACTURING™

1590ZGRP123

www.hammondmfg.com