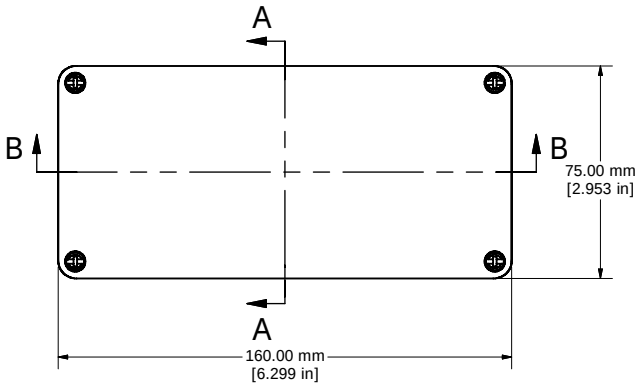

ASSEMBLY

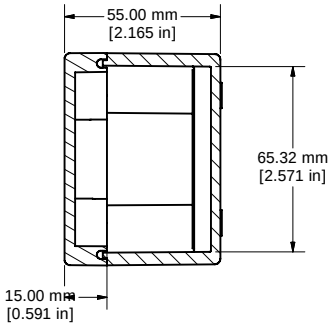

SECTION A-A

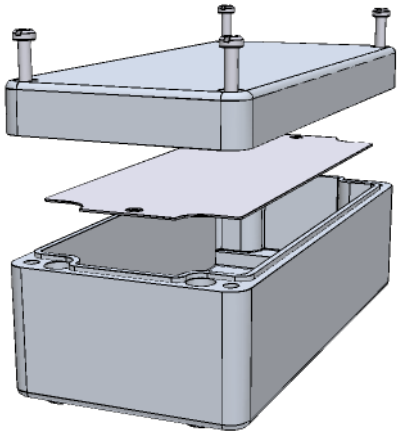

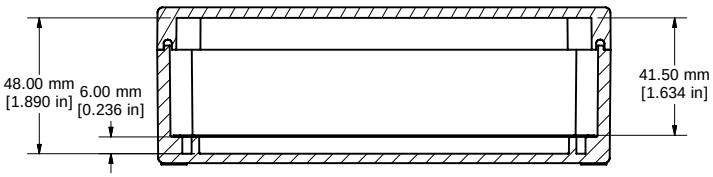

SECTION B-B

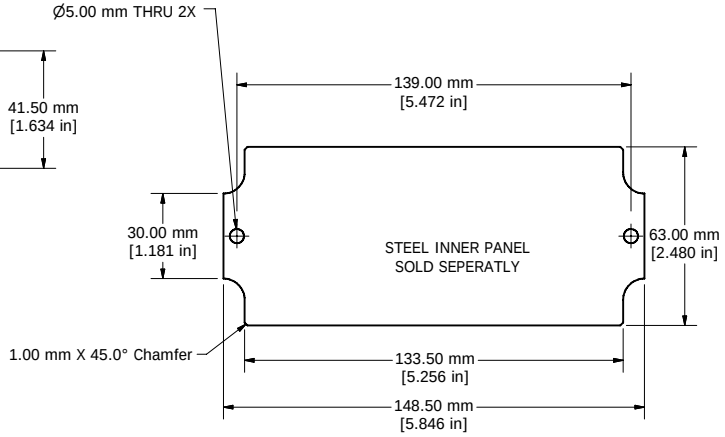

INNER PANEL

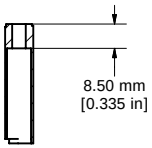

SECTION D-D

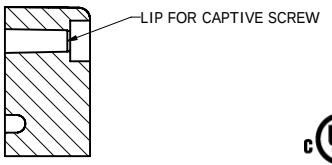

SECTION C-C

c UL us LISTED

File #E65324
NEMA 4, 4X

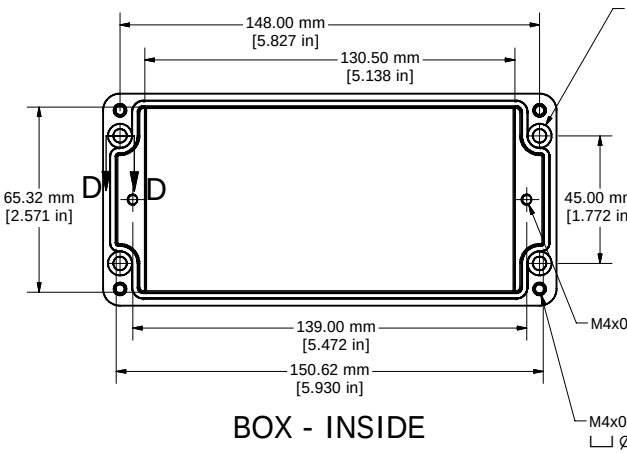

BOX - INSIDE

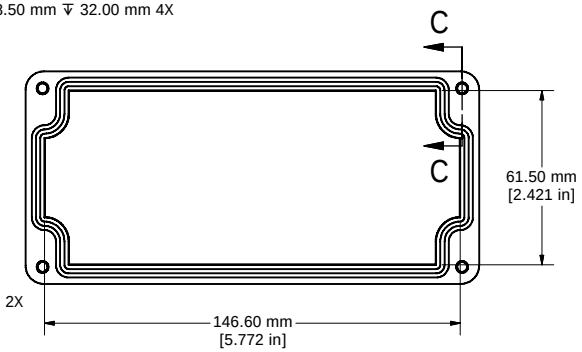

LID - INSIDE

FIBERGLASS ENCLOSURE	
INCLUDES	
1	ENCLOSURE
4	M4 x 25mm PAN HEAD SCREWS
ACCESSORIES	
STEEL INNER PANEL	1590ZGRP083PL

HAMMOND MANUFACTURING™

1590ZGRP083

www.hammondmfg.com