Top View of Assembly

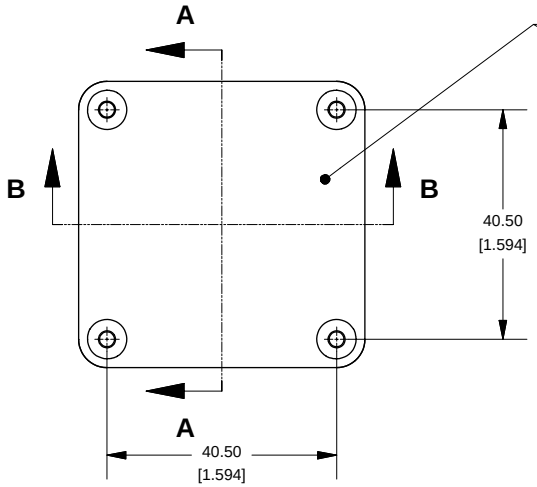

SECTION A-A
End View of Assembly

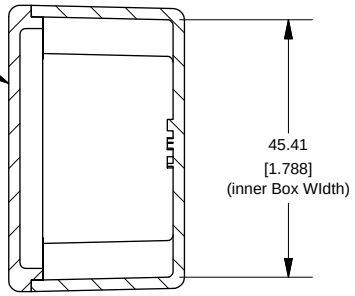

Series 1590LB (Basic)

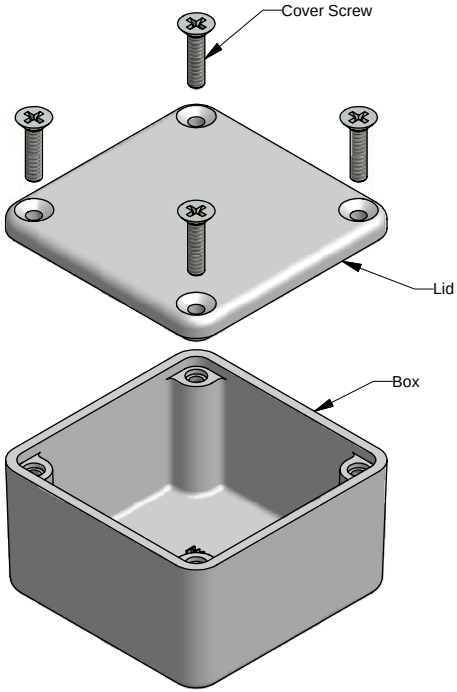

SECTION B-B
Side View of Assembly

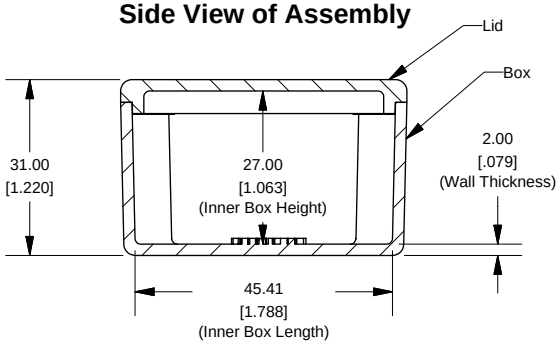

Top View Looking Inside Box

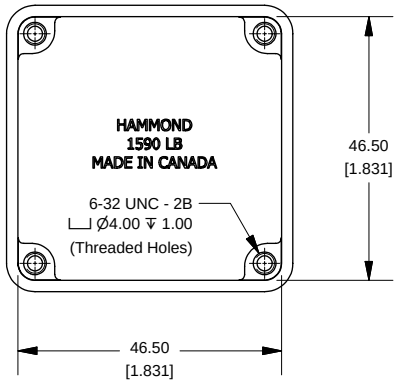

Lid

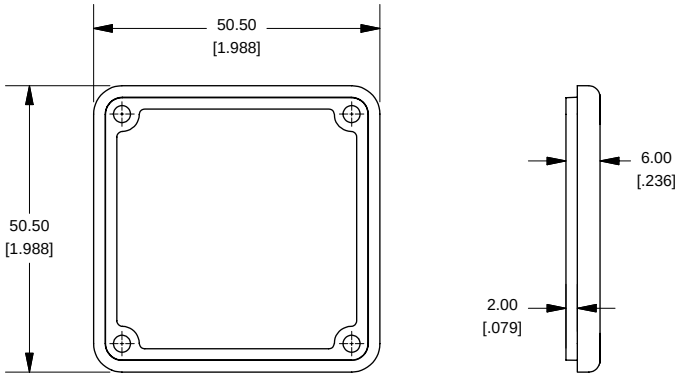

NOTE
Purchased assembly includes box, lid and 4 cover screws. Box and lid are made from Diecast Aluminum Alloy (alloy type 360.1).

PART NUMBERS	
1590LB Enclosure	
Unfinished	1590LB
Black Textured Powder Paint	1590LBBK
1590LB Liquid Resistant Enclosure (Silicon Factory Installed Gasket)	
Unfinished	1590WLB
Black Textured Powder Paint	1590WLBBK
ACCESSORIES	
Unfinished	
Cover Screws (Pkg 100) **[6-32 x 1/2" Nickel Plated Screws]**	1590MS100
Black Textured Powder Paint	
Cover Screws (Pkg 50) **[6-32 x 1/2" Stainless Steel Black Screws]**	1590MS50BK

HAMMOND MANUFACTURING™

www.hammondmfg.com