Top View of Assembly

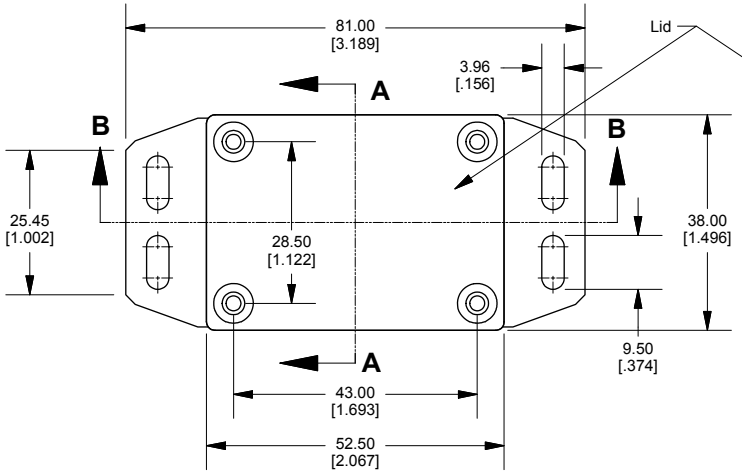

SECTION A-A
End View of Assembly

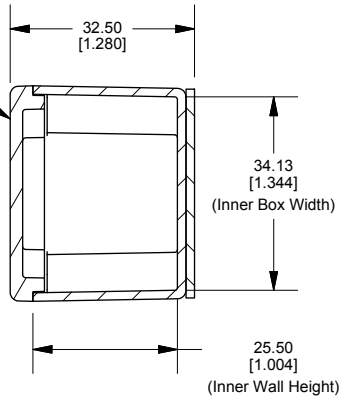

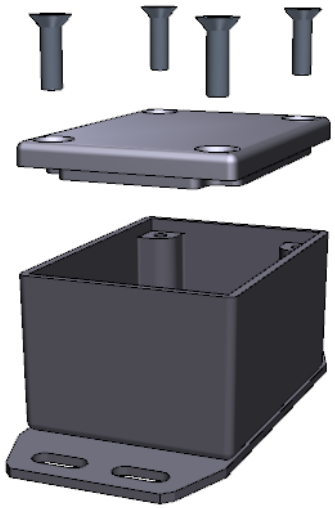

SECTION B-B
Side View of Assembly

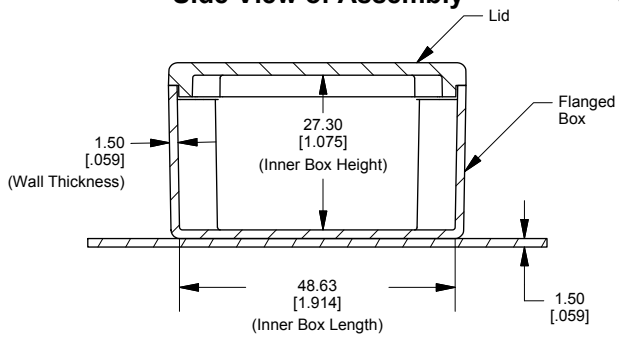

Top View Looking Inside Box

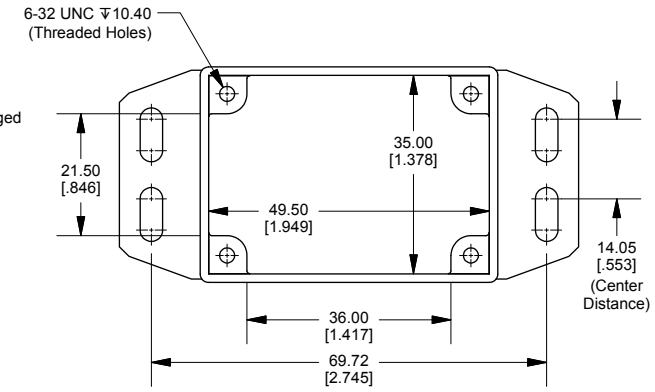

Lid

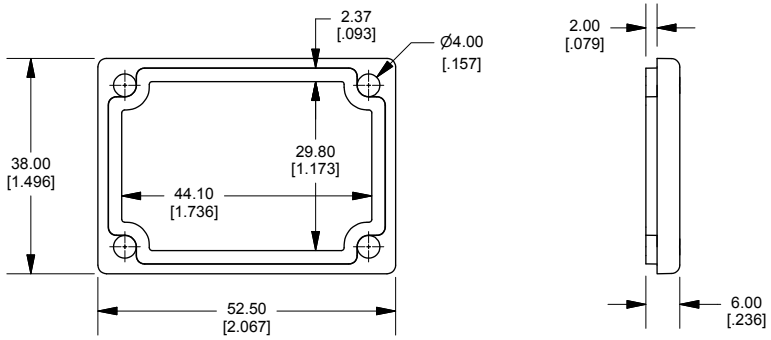

Enclosures can be Factory Modified (Milling, Drilling, Printing etc.)
Contact Factory mjm@hammondmfg.com for quotes
Solid models of this enclosure available in STEP or IGES.

NOTE
Purchased assembly includes box, lid and 4 cover screws.
Box and lid are made from Diecast Aluminum Alloy.
Silicone Gasket supplied with liquid resistant enclosure.
Bottom Flange is Welded.

PART NUMBERS	
1590HF Enclosure	
Natural Finish Enclosure	1590HF
Black Textured Enclosure	1590HFBK
1590HF Liquid Resistant Enclosure (Silicone Gasket)	
Natural Finish Enclosure	1590WHF
Black Textured Enclosure	1590WHFBK
ACCESSORIES	
Recommended Torque: 75 ozf.in / 55 cN.m	
Liquid Resistant Cover Screws	
Stainless Steel Cover Screws (Pkg 100) [6-32 x 1/2" With O-Ring]	1590WMS100
Black Stainless Steel Cover Screws (Pkg 100) [6-32 x 1/2" With O-Ring]	1590WMS100BK
Standard Cover Screws	
Plated Cover Screws (Pkg 100) [6-32 x 1/2"]	1590MS100
Black Cover Screws (Pkg 100) [6-32 x 1/2"]	1590MS100BK

Dimensions:
mm
[inches]

HAMMOND MANUFACTURING™

1590HF

www.hammondmfg.com

Mouser Electronics

Authorized Distributor

Click to View Pricing, Inventory, Delivery & Lifecycle Information:

Hammond:

1590WHF 1590HF 1590HFBK 1590WHFBK