Top View of Assembly

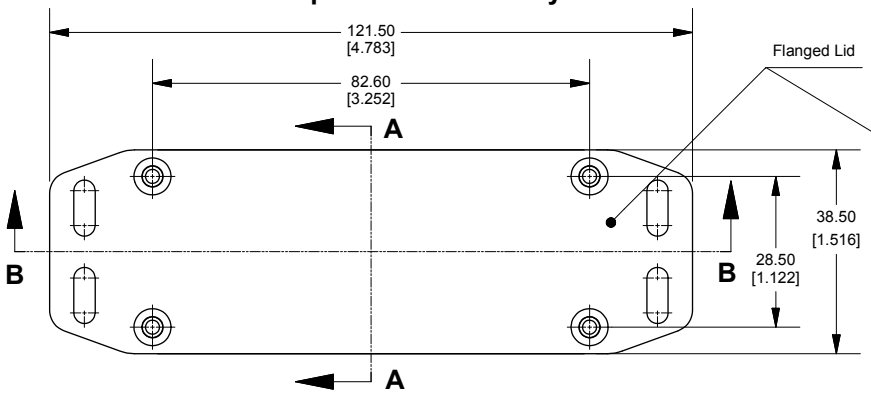

SECTION A-A
End View of Assembly

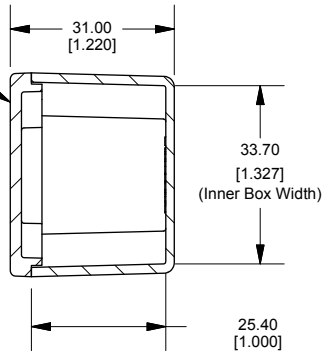



SECTION B-B
Side View of Assembly

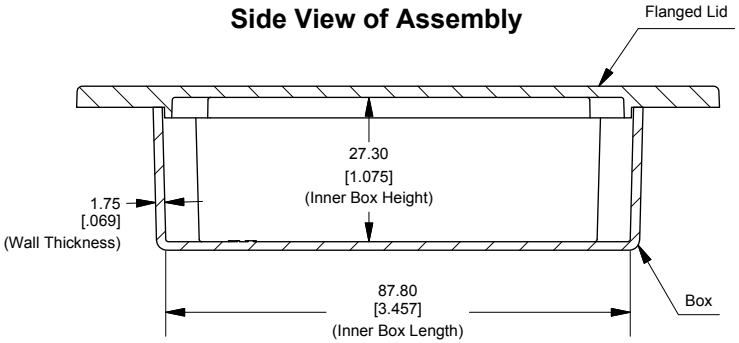

Top View Looking Inside Box

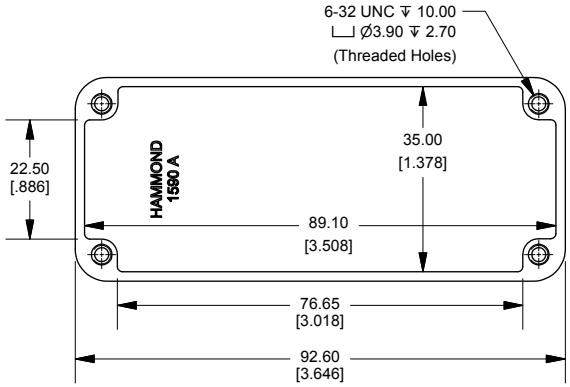

Flanged Lid

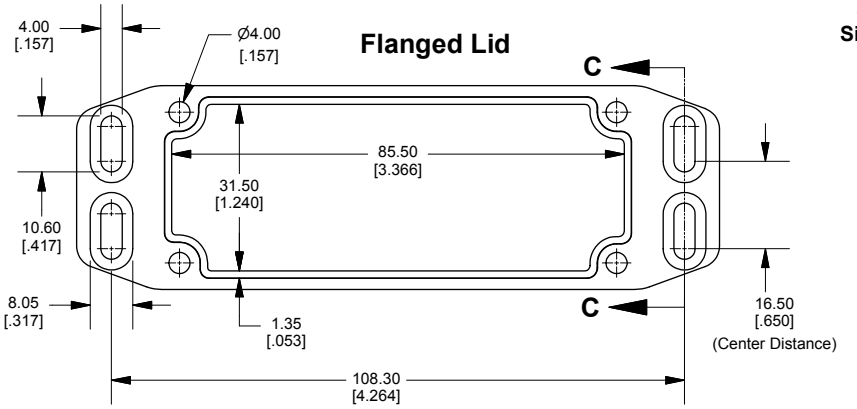

SECTION C-C
Side View of Slot

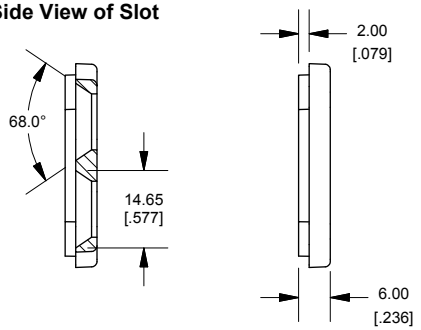

Enclosures can be Factory Modified (Milling, Drilling, Printing etc.)
Contact Factory mjm@hammondmfg.com for quotes
Solid models of this enclosure available in STEP or IGES.

NOTE
Purchased assembly includes box, lid and 4 cover screws.
Box and lid are made from Diecast Aluminum Alloy.
Silicone Gasket supplied with liquid resistant enclosure.

PART NUMBERS	
1590AFL Enclosure	
Natural Finish Enclosure	1590AFL
Black Textured Enclosure	1590AFLBK
1590AFL Liquid Resistant Enclosure (Silicone Gasket)	
Natural Finish Enclosure	1590WAFL
Black Textured Enclosure	1590WAFLBK
ACCESSORIES	
Recommended Torque: 75 ozf.in / 55 cN.m	
Liquid Resistant Cover Screws	
Stainless Steel Cover Screws (Pkg 100) [6-32 x 1/2" With O-Ring]	1590WMS100
Black Stainless Steel Cover Screws (Pkg 100) [6-32 x 1/2" With O-Ring]	1590WMS100BK
Standard Cover Screws	
Plated Cover Screws (Pkg 100) [6-32 x 1/2"]	1590MS100
Black Cover Screws (Pkg 100) [6-32 x 1/2"]	1590MS100BK

Dimensions:
mm
[inches]

HAMMOND MANUFACTURING™

1590AFL

www.hammondmfg.com