Top View Looking inside Box

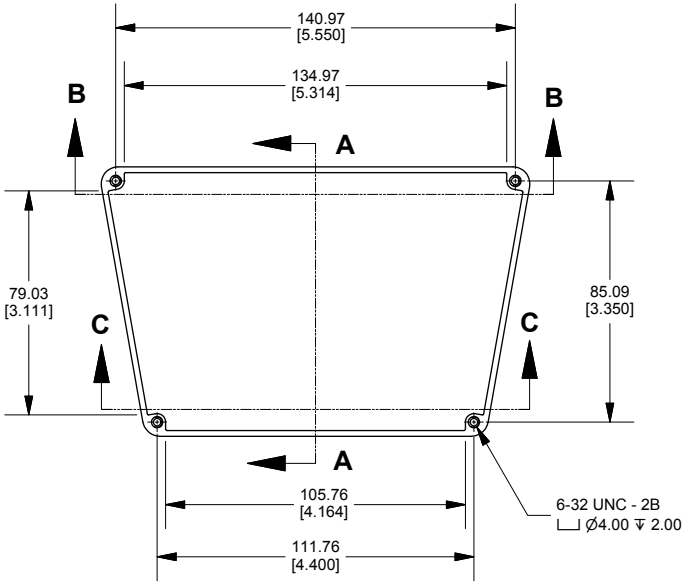

SECTION A-A
Side View of Assembly

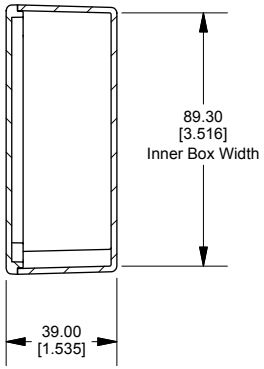



SECTION B-B
Large end View

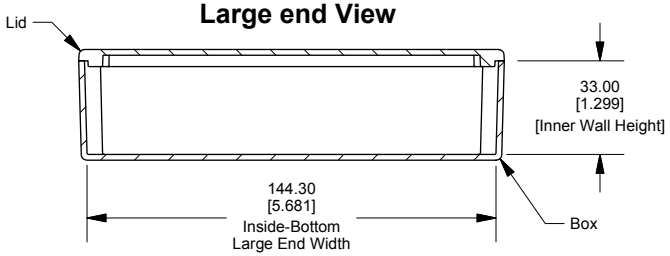

SECTION C-C
Small End View

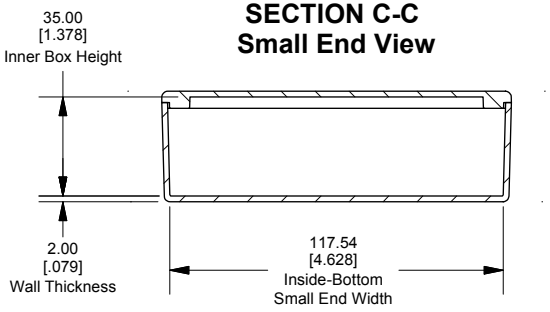

Lid

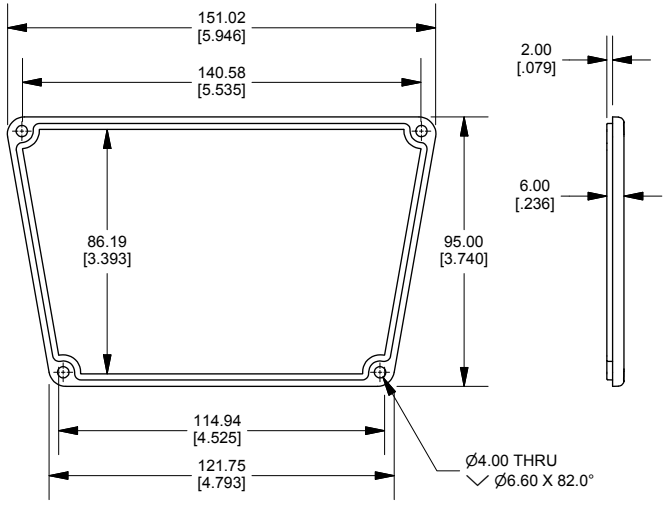

Enclosures can be Factory Modified (Milling, Drilling, Printing etc.)
Contact Factory mjm@hammondmfg.com for quotes
Solid models of this enclosure available in STEP or IGES.

NOTE
Purchased assembly includes box, lid and 4 cover screws. Box and lid are made from Diecast Aluminum Alloy (alloy type ADC-12).

PART NUMBERS	
1590TRPC Enclosure	
Unfinished	1590TRPC
Black Textured Powder Paint	1590TRPCBK
Light Gray Textured Powder Paint	1590TRPCLG
ACCESSORIES	
Recommended Torque: 75 ozf.in / 55 cN.m	
Unfinished Cover Screws (Pkg 100) [6-32 x 1/2" Nickel Plated Screws]	1590MS100
Black Textured Cover Screws (Pkg 50) [6-32 x 1/2" Black Screws]	1590MS50BK

HAMMOND MANUFACTURING™

1590TRPC

www.hammondmfg.com