NOTES

MATERIAL: DIECAST ALUMINUM ALLOY
4 - (6-32) PHILLIPS SCREWS
WATERPROOF VERSION IS AVAILABLE
FINISH: NONE (NO SUFFIX), BLACK (BK), GRAY (GY)
POLYESTER POWDER COAT, TEXTURED
MODIFICATIONS AND SCREENING AVAILABLE

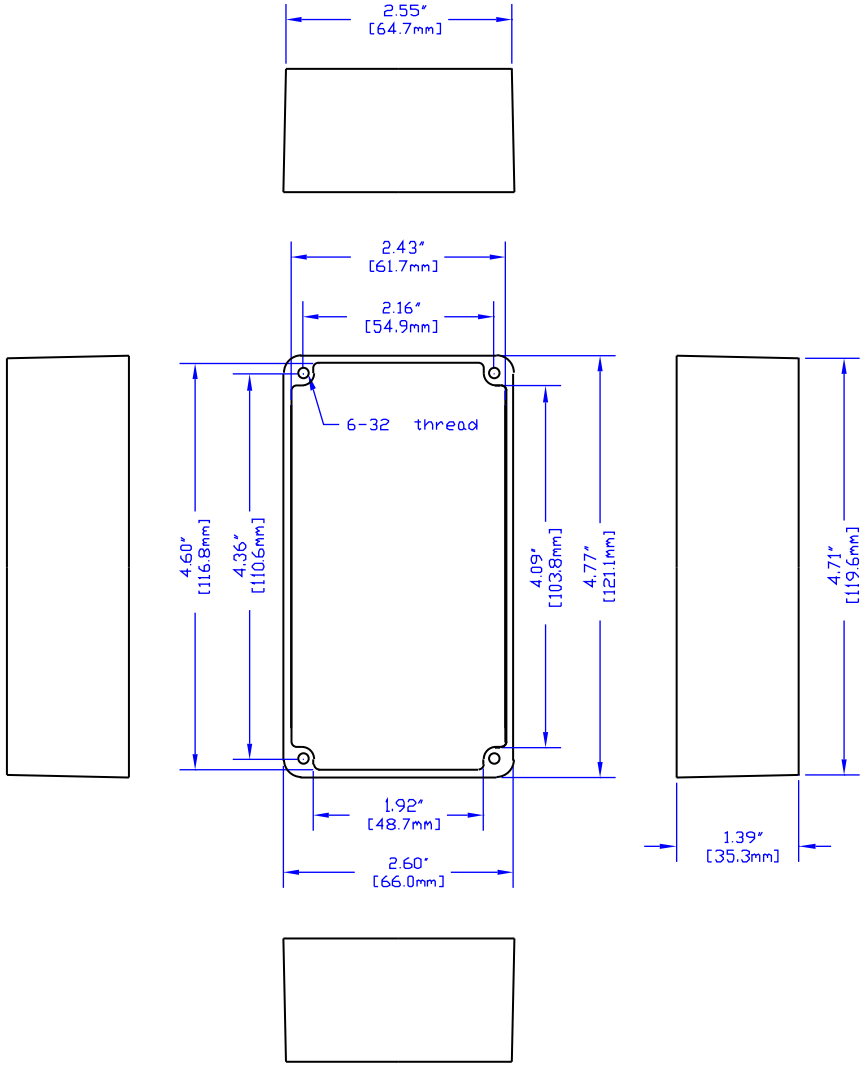

VIEW OF BOX (LID REMOVED)

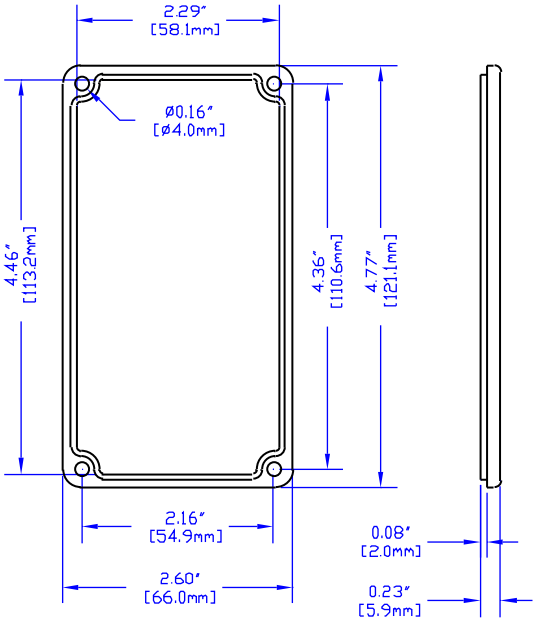

VIEW OF LID (INSIDE)

HAMMOND MANUFACTURING
CANADA (519) 886 7171 FAX (519) 886 8311
U.S.A. (716) 631 5700 FAX (716) 631 1156
WEB: WWW.HAMMONDMFG.COM

UNLESS OTHERWISE SPECIFIED
DIMENSIONS ARE IN INCHES

.X	+/- .1
.XX	+/- .06
.XXX	+/- .02
.XXXX	+/- .005
HOLES	+/- .005
ANGLES	+/- .5 DEG.

DESCRIPTION: ALUMINUM CAST ENCLOSURES
PART NUMBER: 1590N1
DATE: 12/21/99
PAGE: 1 OF 1