Top View of Assembly

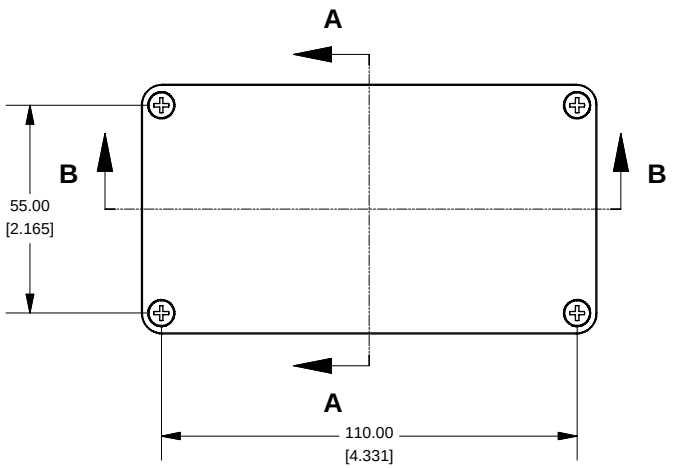

SECTION A-A
End View of Assembly

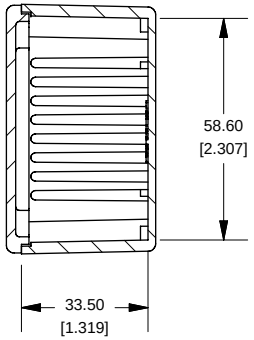

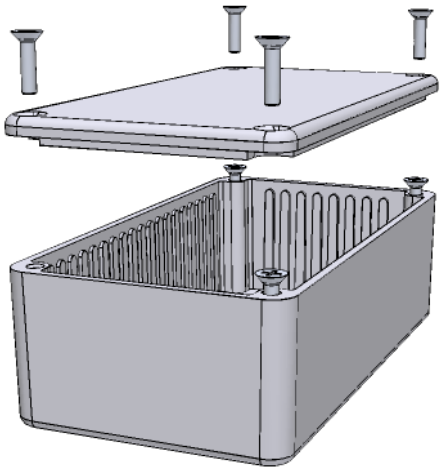

SECTION B-B
Side View of Assembly

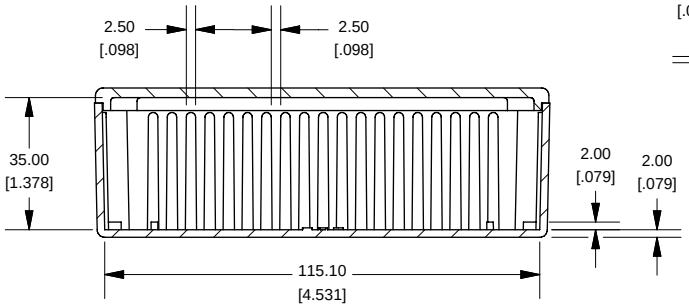

Top View Looking Inside Box

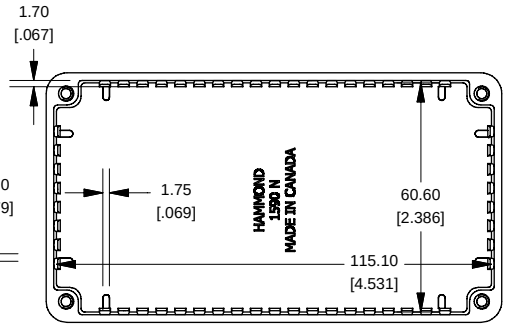

Lid

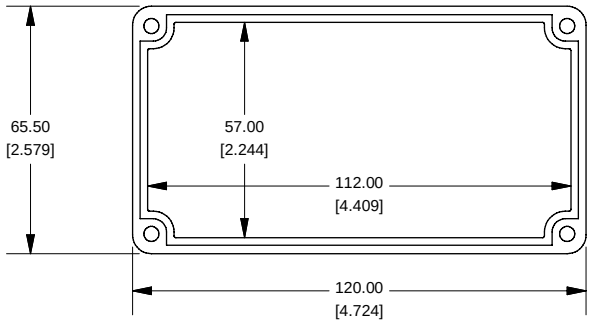

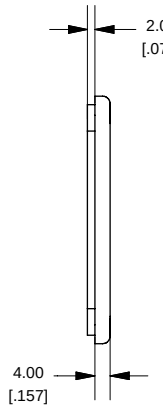

Enclosures can be Factory Modified (Milling, Drilling, Printing etc.)
Contact Factory mjm@hammondmfg.com for quotes
Solid models of this enclosure available in STEP or IGES.

NOTE
Purchased assembly includes box, lid and 4 cover screws. Box and lid are made from Diecast Aluminum Alloy (alloy type 380). Silicone Gasket Loctite #5950

PART NUMBERS	
1590N Enclosure	
Unfinished	1590N
Grey Textured Polyester Powder Paint - RAL 7038	1590NGY
Black Textured Polyester Powder Paint - RAL 9011	1590NBK
1590N Liquid Resistant Enclosure (Silicon Factory Installed Gasket)	
Unfinished	1590WN
Black Textured Powder Paint	1590WNBK
ACCESSORIES	
Recommended Torque: 75 ozf.in / 55 cN.m	
Black Textured Cover Screws (Pkg 50) [6-32 x 1/2" SS Type 304]	1590WMS100BK
Unfinshed Cover Screws (Pkg 100) [6-32 x 1/2" Nickel Plated Screws]	1590WMS100
Standard Cover Screws	
Unfinshed Cover Screws (Pkg 100) [6-32 x 1/2" Nickel Plated Screws]	1590MS100
Black Textured Cover Screws (Pkg 50) [6-32 x 1/2" SS Type 304]	1590MS100BK

HAMMOND MANUFACTURING™

1590N

www.hammondmfg.com