Series 1590KK (Basic)

Top View of Assembly

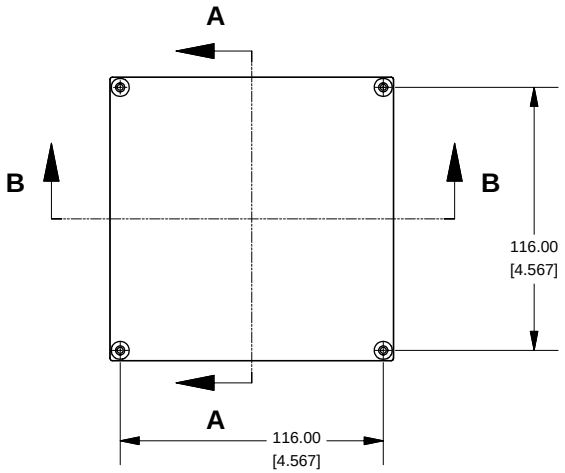

SECTION A-A
End View of Assembly

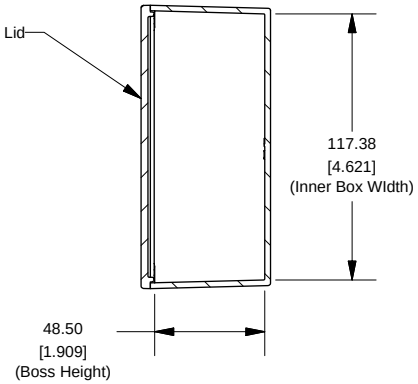

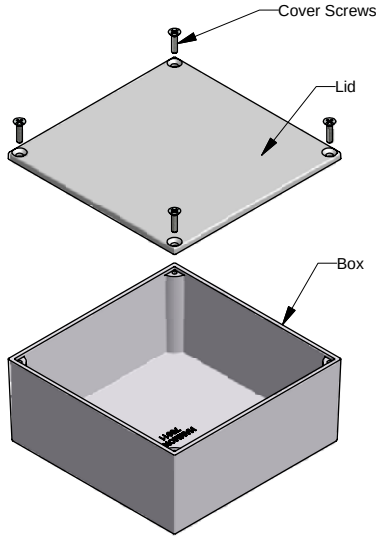

SECTION B-B
Side View of Assembly

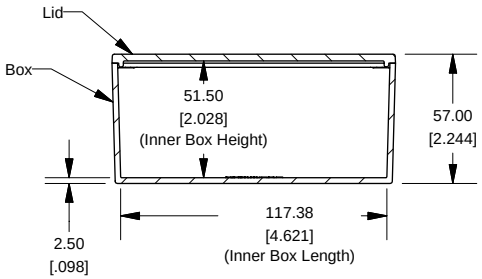

Top View Looking Inside Box

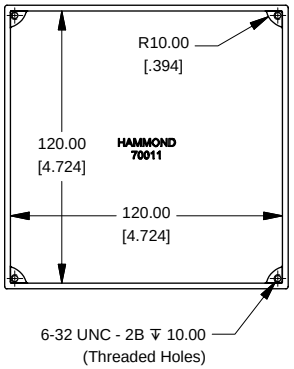

Lid

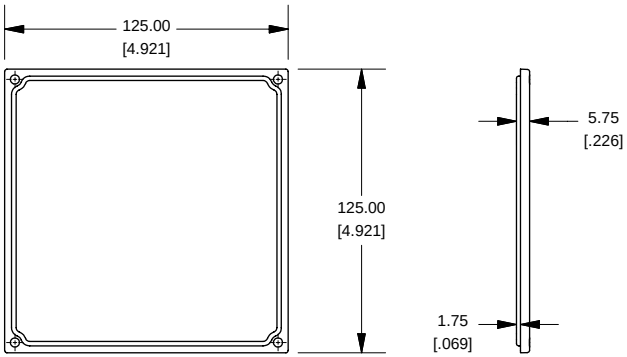

NOTE
Purchased assembly includes box, lid and 4 cover screws. Box and lid are made from Diecast Aluminum Alloy (alloy type 360.1). Flanges are made from Stamped Aluminum 5052-H32

PART NUMBERS	
1590KK Enclosure	
Unfinished	1590KK
Black Textured Powder Paint	1590KKBK
1590KK Liquid Resistant Enclosure (Silicon Factory Installed Gasket)	
Unfinished	1590WKK
Black Textured Powder Paint	1590WKKBK
ACCESSORIES	
Unfinished	
Cover Screws (Pkg 100) **[6-32 x 1/2" Nickel Plated Screws]**	1590MS100
Black Textured Powder Paint	
Cover Screws (Pkg 50) **[6-32 x 1/2" Stainless Steel Black Screws]**	1590MS50BK

HAMMOND MANUFACTURING™

www.hammondmfg.com