Top View of Assembly

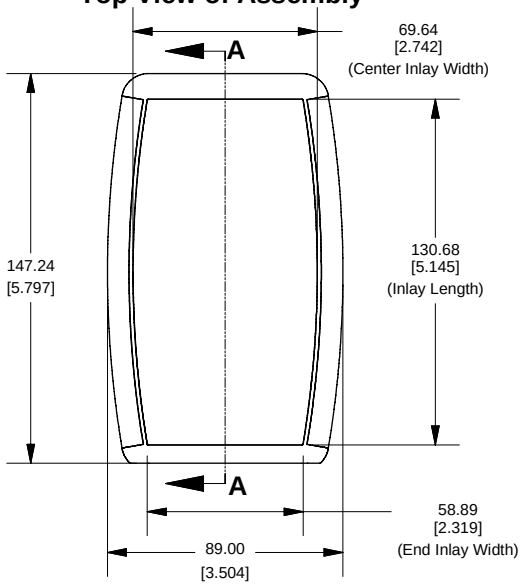

SECTION A-A
(Side View Inside Assembly)

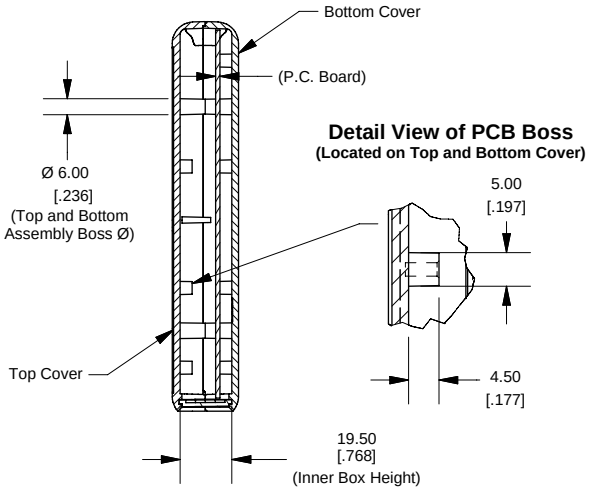

Detail View of PCB Boss
(Located on Top and Bottom Cover)

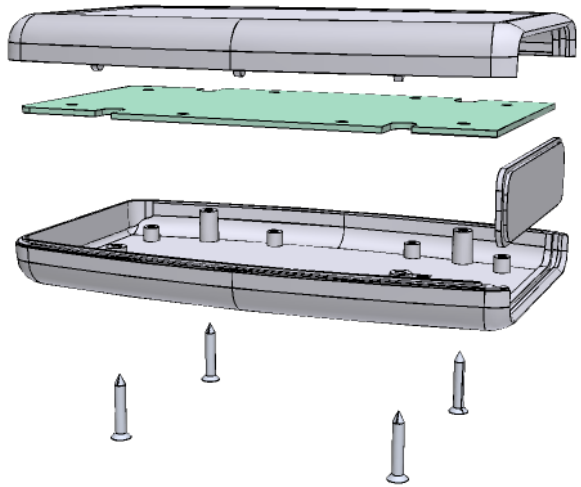

End View of Assembly

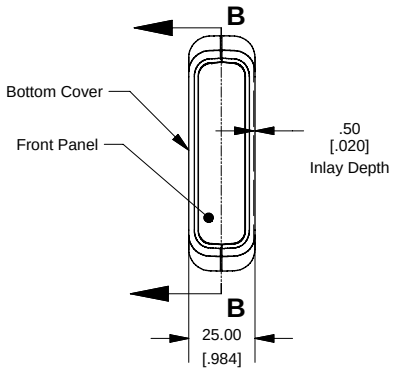

SECTION B-B
(Inside of Bottom Cover)

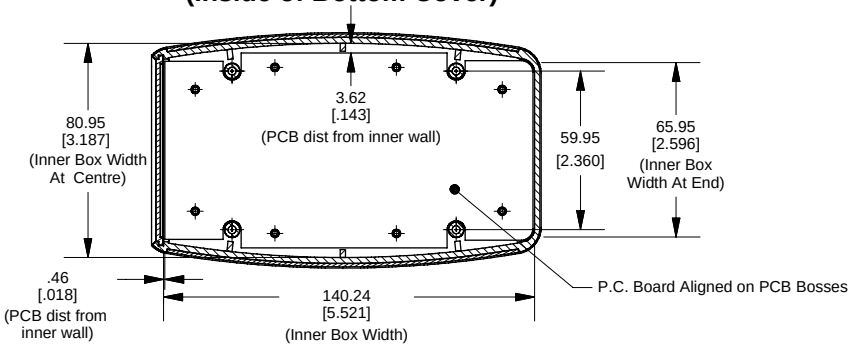

Front/Rear Panel
(Dashed Line Indicates Viewing Area)

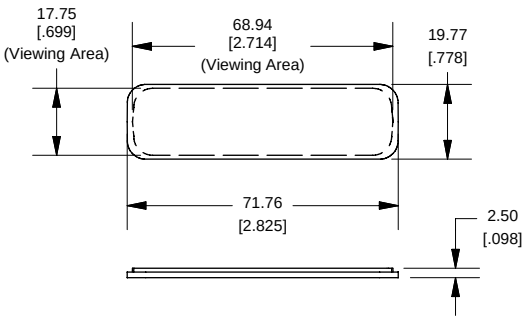

Maximum P.C. Board Size

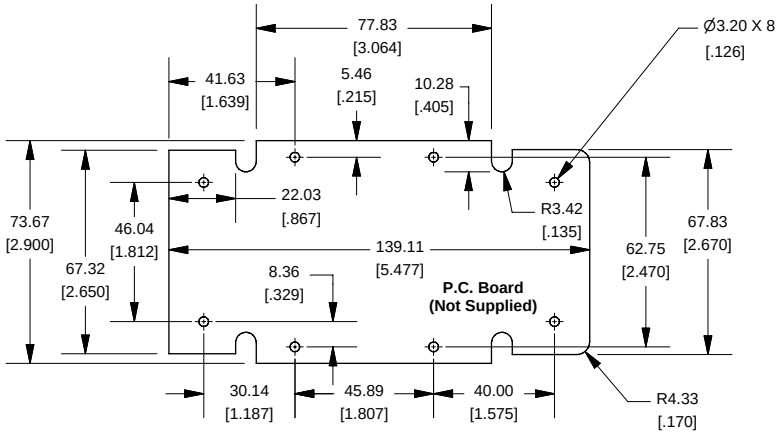

Enclosures can be Factory Modified (Milling, Drilling, Printing etc.)
Solid models of this enclosure available in STEP or IGES.
Contact Factory mjm@hammondmfg.com

NOTE
Enclosure molded from GP ABS (UL94-HB) plastic.
Purchased assembly includes top and bottom cover, front plastic panel and 4 cover screws.

PART NUMBERS	
1553D Enclosure	
Black Enclosure/Grey Over-mold	1553DBK
Grey Enclosure/Grey Over-mold	1553DGY
ACCESSORIES	
Cover Screws (Pkg 100) [#4 x 5/8" self-tapping oval head (15.9mm)]	1593MS100 (Silver) 1593MS100BK (Black)
P.C. Board Screws [#4 x 1/4" self-tapping (6.4mm)]	1593ATS50 (Pkg 50) 1593ATS100 (Pkg 100)
Belt or Pocket Clip	1599CLIP (Black) 1599CLIPGY (Grey)

HAMMOND MANUFACTURING™

1553D

www.hammondmfg.com