Top View of Assembly

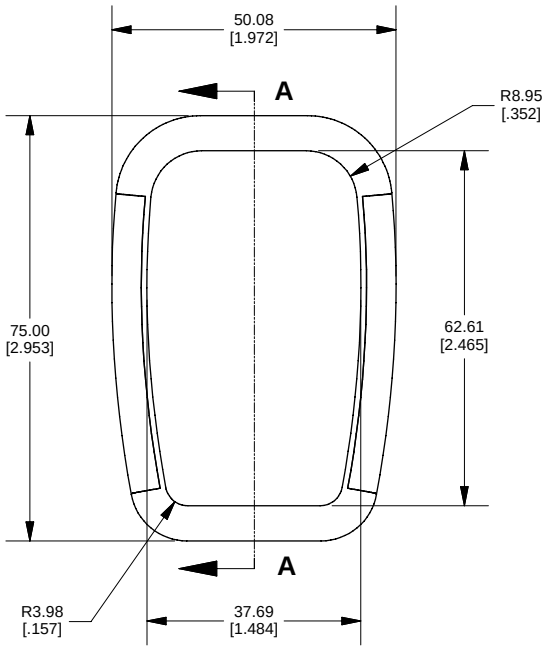

SECTION A-A
(Side View Inside Assembly)

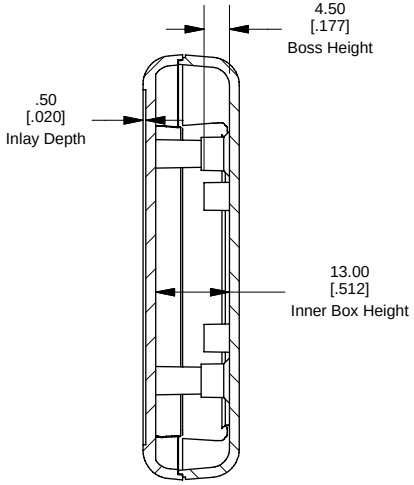



End View of Assembly

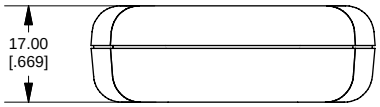

Inside of Bottom Cover

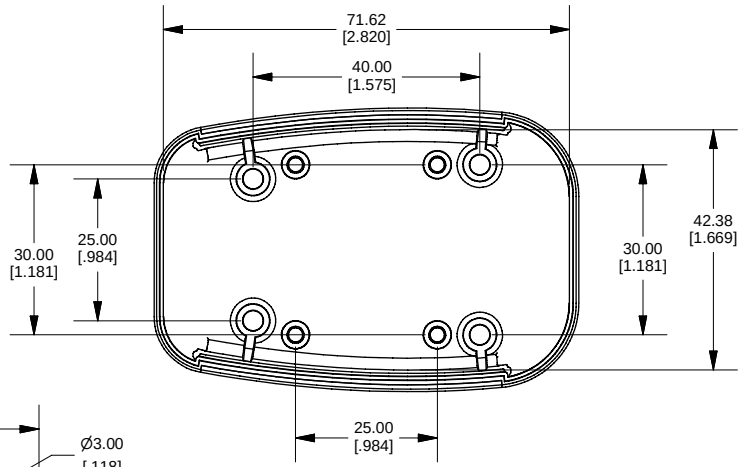

Maximum PCB Size

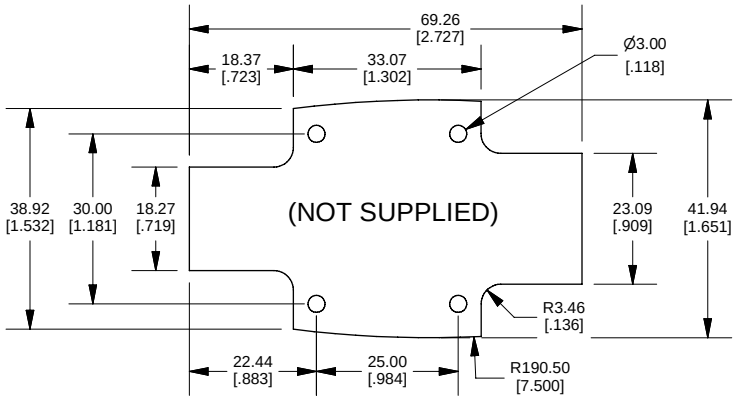

NOTE
Enclosure molded from GP ABS plastic.
Purchased assembly includes top and bottom cover, and 4 cover screws.

PART NUMBERS	
1553AA Enclosure	
Black Enclosure/Grey Over-mold	1553AABK
Grey Enclosure/Grey Over-mold	1553AAGY
ACCESSORIES	
Replacement Cover Screws (Pkg 100)	1591TS100 (Silver) 1591TS100BK (Black)
P.C. Board Screws	1593ATS50 (Pkg 50) 1593ATS100 (Pkg 100)

HAMMOND MANUFACTURING™

1553AA

www.hammondmfg.com