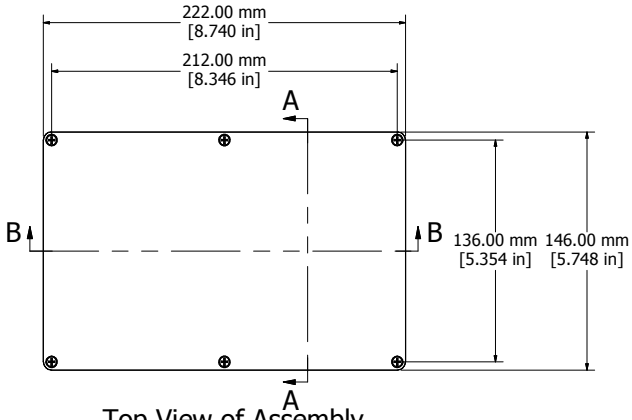

Top View of Assembly

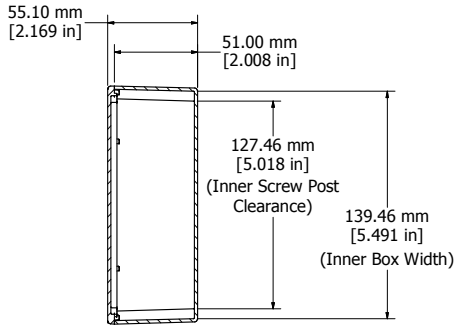

SECTION A-A
End View of Assembly

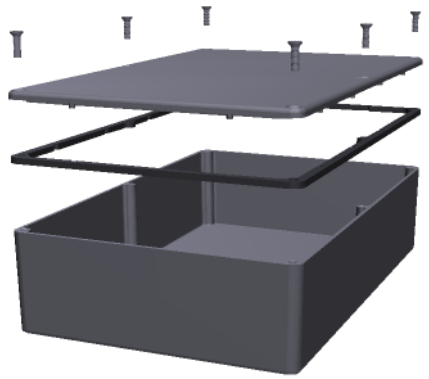

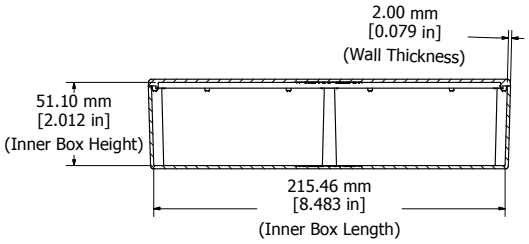

SECTION B-B
Side View Of Assembly

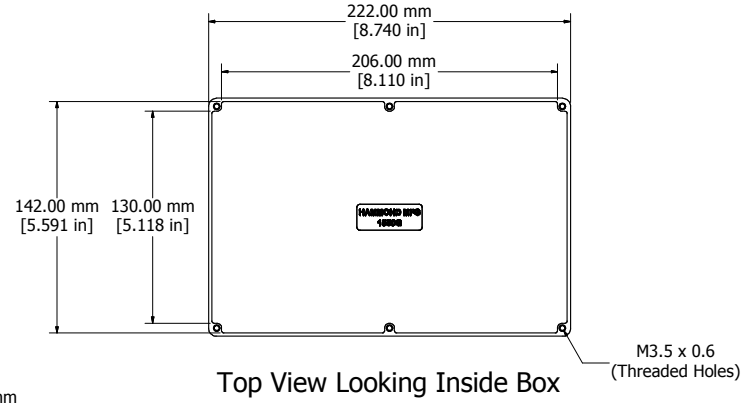

Top View Looking Inside Box

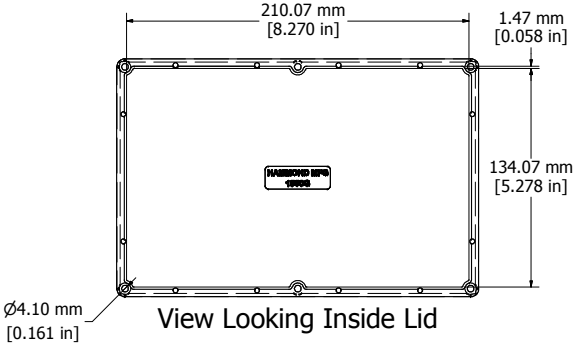

View Looking Inside Lid

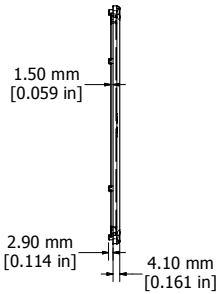

Enclosures can be Factory Modified (Milling, Drilling, Printing etc.)
Contact Factory mjm@hammondmfg.com for quotes
Solid models of this enclosure available in STEP or IGES.

NOTE
Purchased assembly includes box, lid, and 6 cover screws. Box and lid are made from Diecast Aluminum Alloy. EVA Foam Gasket supplied with Liquid Resistant Enclosures

PART NUMBERS	
1550G Enclosure	
Unfinished	1550G
Black Textured Polyester Powder Paint	1550GBK
1550WG Liquid Resistant Enclosure	
Unfinished	1550WG
Black Textured Polyester Powder Paint	1550WGBK
Accessories	
Recommended Torque: 75 ozf.in / 55 cN.m	
Unfinshed Cover Screws (Pkg 100) [M3.5 x 0.6 18-8 SS]	1550MS100

HAMMOND MANUFACTURING™

1550WG

www.hammondmfg.com