HAMMOND MANUFACTURING

Quality Products. Service Excellence.

Type 12 Mild Steel Pushbutton Enclosures *1490 Series*

Sloped Consolet

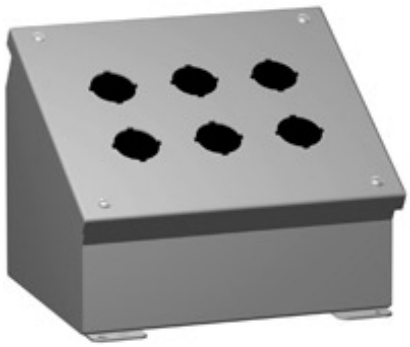

Application

- Designed to accept standard heavy duty oil tight pushbuttons, switches and pilot lights.
- Ideal for wall or surface mounting to provide the necessary control slope.
- Provides protection from dirt, dust, oil and water.

Standards

- UL 508 Type 12 and 13
- CSA Type 12 and 13
- JIC standard EGP-1-1967
- **Complies with**
  - NEMA Type 12 and 13
  - IEC 60529, IP54
- Appropriate components are required to maintain these standards.

Construction

- Formed 14 gauge steel.
- Smooth continuously welded seams.
- Construction provides either a 30° or 60° slope on front cover depending on mounting position.
- Welded brackets provide for enclosure mounting.
- Captive cover screws thread into sealed wells.
- Larger enclosures provide internally hinged removable covers designed to hold the cover open during wiring (as noted in table).
- Oil resistant gasket and adhesive.
- A bonding stud is provided on the door and a grounding stud is provided on the enclosure.

Finish

- Cover and enclosure are phosphatized and finished in ANSI 61 gray powder coating.

Accessories

- Hole Plugs
- Pedestal and Base

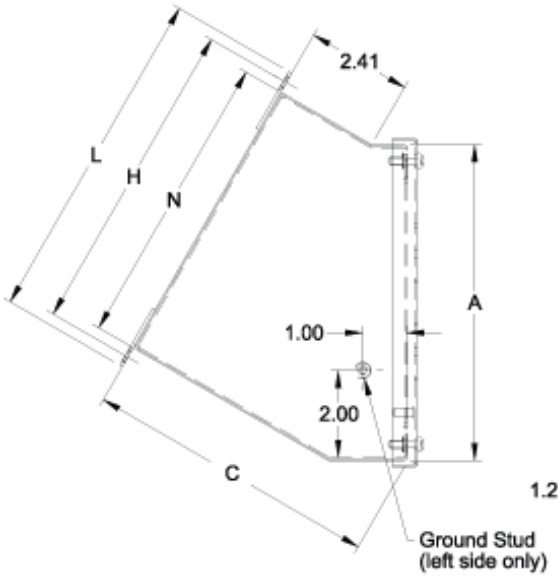

Side View

1490G4 -K30
1490MG4 -MK30

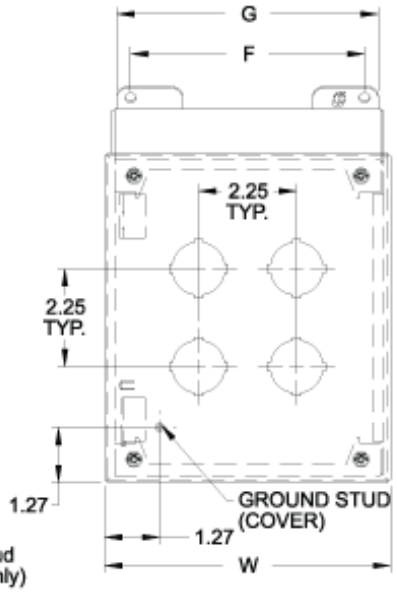

Front View

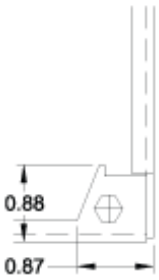

Hinge Detail

Retractable pin allows door to be mount on left side or right side.

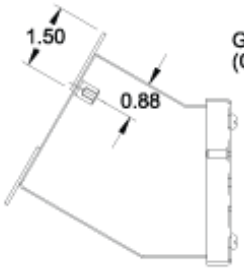

Side View

1490D1 -D4
1490MD1 -MD4

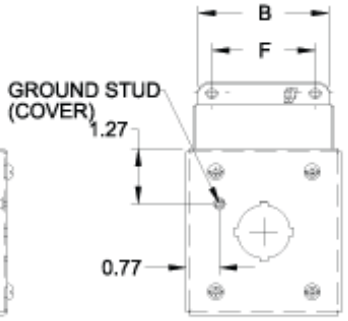

FRONT VIEW

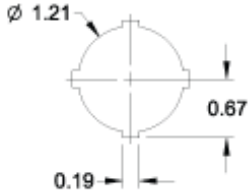

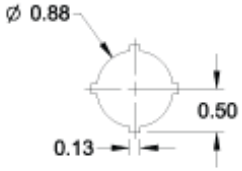

30.5mm Detail (1490 Series) 22.5mm Detail (1490M Series)

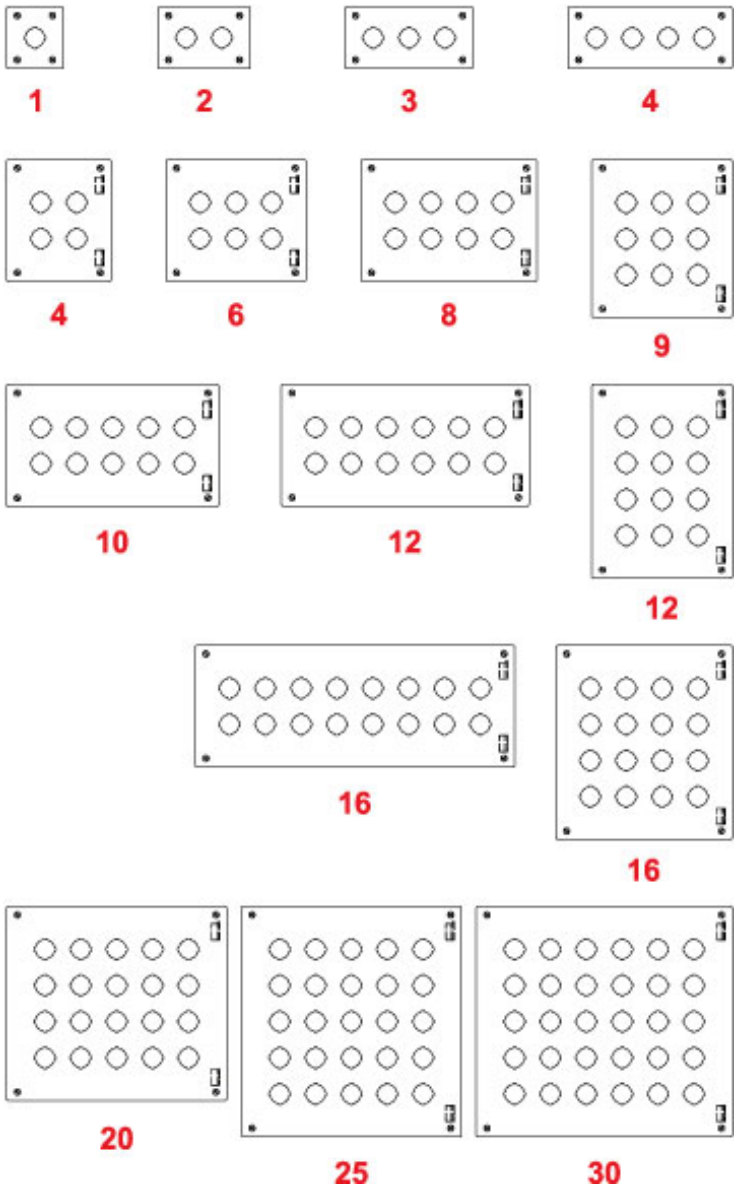

Part No.		No. Of											Ship
30.5mm Holes	22.5mm Holes	Holes	A	B	C	F	G	H	L	N	W	Z	Wt. lbs.
1490D1[1]	**1490MD1[1]**	1	3.50	3.25	4.88	2.38	3.00	4.03	4.53	3.53	3.56	3.81	2
1490D2[1]	**1490MD2[1]**	2	3.50	5.50	4.88	4.63	5.25	1.03	4.53	3.53	5.81	3.81	3
1490D3[1]	**1490MD3[1]**	3	3.50	7.75	4.88	6.88	7.50	4.03	4.53	3.53	8.06	3.81	5
1490D4[1]	**1490MD4[1]**	4	3.50	10.00	4.88	9.13	8.75	4.03	4.53	3.53	10.31	3.81	6
1490G4	**1490MG4**	4	7.25	6.25	6.75	5.38	6.00	7.28	7.78	6.78	6.56	7.56	6
1490G6	**1490MG6**	6	7.25	8.50	6.75	7.63	8.25	7.28	7.78	6.78	8.81	7.56	7
1490G8	**1490MG8**	8	7.25	10.75	6.75	9.88	10.50	7.28	7.78	6.78	11.06	7.56	9
1490H9	**1490MH9**	9	9.50	8.50	7.88	7.63	8.25	9.25	9.75	8.75	8.81	9.81	9
1490G10	**1490MG10**	10	7.25	13.00	6.75	12.13	12.75	7.28	7.78	6.78	13.31	7.56	10
1490G12	**1490MG12**	12	7.25	15.25	6.75	14.38	15.00	7.28	7.78	6.78	15.56	7.56	11
1490J12	**1490MJ12**	12	11.75	8.50	9.00	7.63	8.25	11.19	11.69	10.69	8.81	12.06	13
1490G16	**1490MG16**	16	7.25	19.75	6.75	18.88	19.50	7.28	7.78	6.78	20.06	7.56	14
1490J16	**1490MJ16**	16	11.75	10.75	9.00	9.88	10.50	11.19	11.69	10.69	11.06	12.06	14
1490J20	**1490MJ20**	20	11.75	13.00	9.00	12.13	12.75	11.19	11.69	10.69	13.31	12.06	16
1490K25	**1490MK25**	25	14.00	13.00	10.13	12.13	12.75	13.13	13.63	12.63	13.31	14.31	17
1490K30	**1490MK30**	30	14.00	15.25	10.13	14.38	15.00	13.13	13.63	12.63	15.56	14.31	19

[1] Not hinged

Data subject to change without notice

© 2015. Hammond Manufacturing Ltd. All rights reserved.