HAMMOND MANUFACTURING

Quality Products. Service Excellence.

Type 12 Consolets *1488 Series*

Hinged Cover



Application

- Designed for use as electric, hydraulic or pneumatic control and instrument enclosures.
- Ideal for flat or surface mounting/pedestal to provide the necessary 30° or 60° control slope.
- Provides protection from dirt, dust, oil and water.

Standards

- UL 508 Type 12, 13
- CSA Type 12, 13
- **Complies with**
  - NEMA Type 12, 13
  - IEC 60529, IP54

Construction

- Formed 14 gauge steel.
- mooth, continuously welded seams.
- Construction provides either 30° or 60° slope on front cover depending on mounting position.
- Continuously hinged cover may be removed by pulling the hinge pin.
- Captive cover screws thread into sealed wells.
- Oil resistant gasket and adhesive.
- A bonding stud is provided on the door and a ground stud is provided on th enclosure.

Finish

- Cover and enclosure are phosphatized and finished in ANSI 61 gray powder coating.

Accessories

- Pedestal and Base

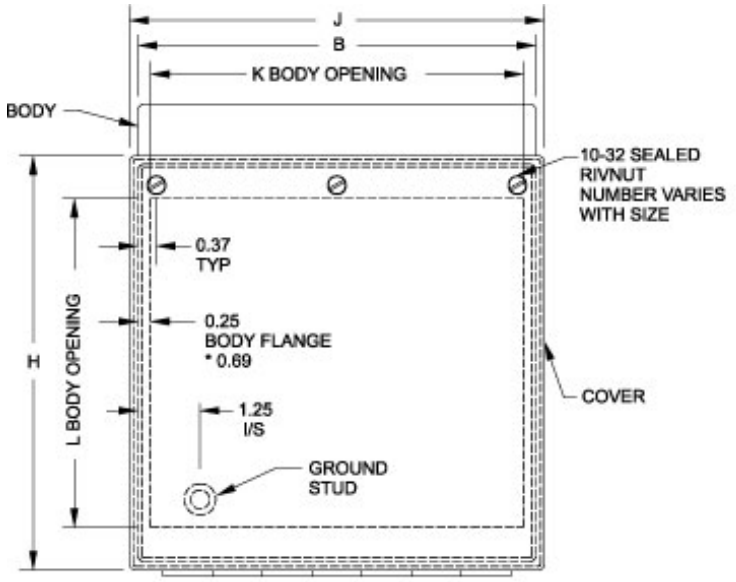

Front View

*Bracketed for 1488LL13, LN13 & LQ13

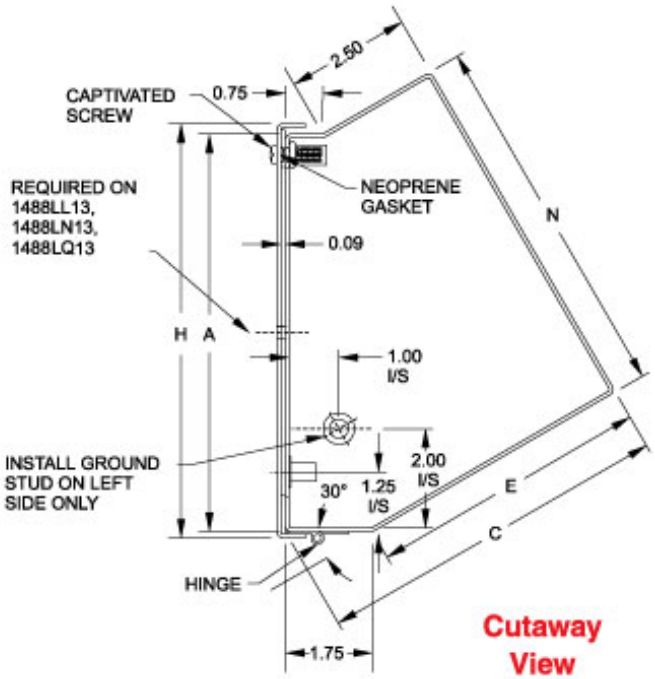

Cutaway View

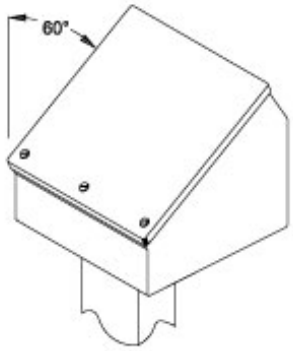

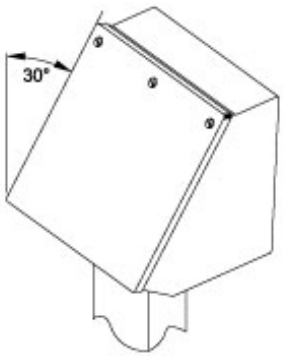

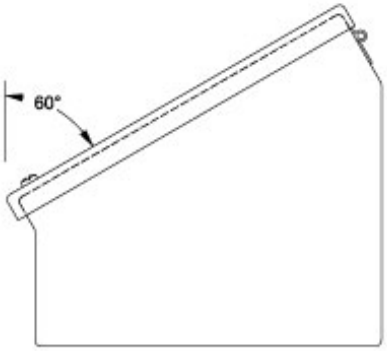

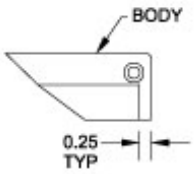

Corner View with Cover Removed

Part No.	A	B	C	E	N	L	K	H	J	Ship Wt. lbs.
1488EE7	8.00	8.00	7.16	5.64	7.44	6.63	7.50	8.34	8.34	9
1488EH7	8.00	12.00	7.16	5.64	7.44	6.63	11.50	8.34	12.34	11
1488EJ7	8.00	16.00	7.16	5.64	7.44	6.63	15.50	8.34	16.34	13
1488EL7	8.00	20.00	7.16	5.64	7.44	6.63	19.50	8.34	20.34	15
1488HH9	12.00	12.00	9.16	7.64	10.90	10.63	11.50	12.34	12.34	16
1488HJ9	12.00	16.00	9.16	7.64	10.90	10.63	15.50	12.34	16.34	19
1488HL9	12.00	20.00	9.16	7.64	10.90	10.63	19.50	12.34	20.34	24
1488HN9	12.00	24.00	9.16	7.64	10.90	10.63	23.50	12.34	24.34	26
1488JJ11	16.00	16.00	11.16	9.64	14.37	14.63	15.50	16.34	16.34	26
1488JL11	16.00	20.00	11.16	9.64	14.37	14.63	19.50	16.34	20.34	30
1488JN11	16.00	24.00	11.16	9.64	14.37	14.63	23.50	16.34	24.34	39
1488JQ11	16.00	30.00	11.16	9.64	14.37	14.63	29.50	16.34	30.34	45
1488JS11	16.00	36.00	11.16	9.64	14.37	14.63	35.50	16.34	36.34	44
1488LL13	20.00	20.00	13.16	11.64	17.83	18.63	18.63	20.34	20.34	37
1488LN13	20.00	24.00	13.16	11.64	17.83	18.63	22.63	20.34	24.34	44
1488LQ13	20.00	30.00	13.16	11.64	17.83	18.63	28.63	20.34	30.34	47

© 2015. Hammond Manufacturing Ltd. All rights reserved.