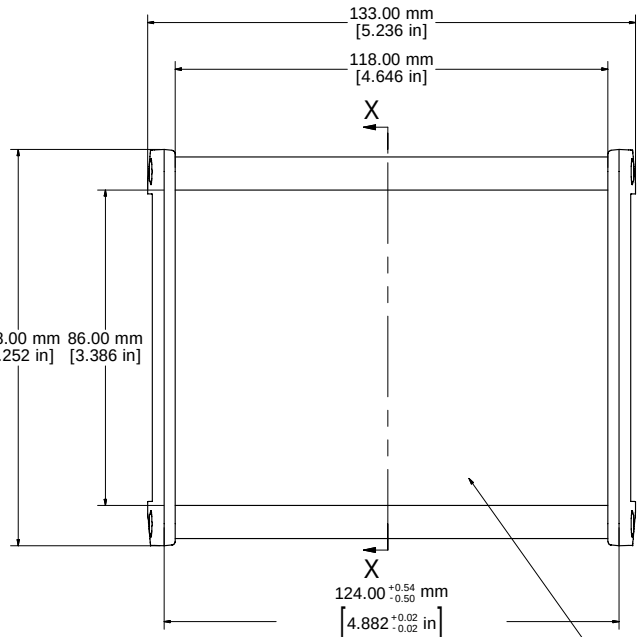

ASSEMBLY - VIEW FROM TOP

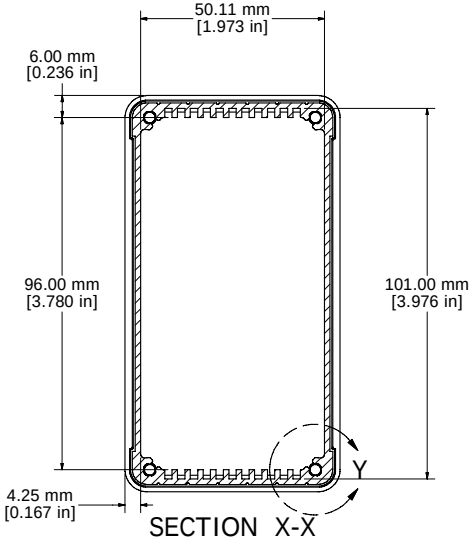

SECTION X-X

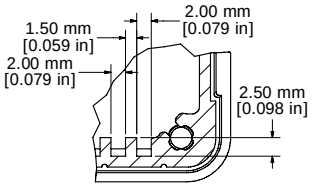

DETAIL Y



Fits 120mm (4.724") X 80mm (3.149") PCB
Note: Aluminum extrusion has a tolerance of -/+ .02"

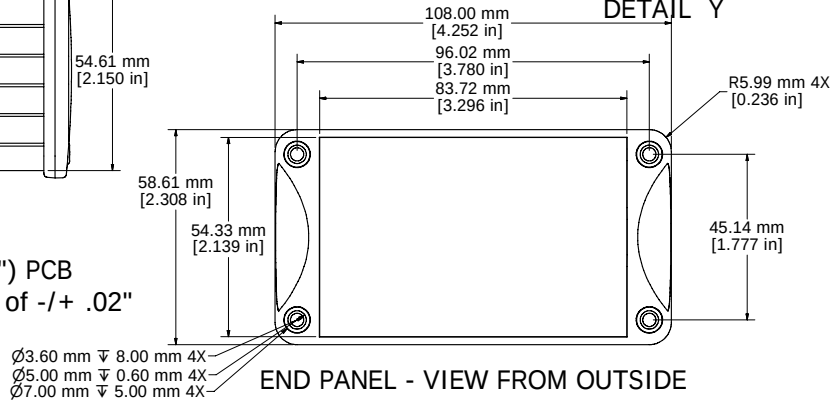

END PANEL - VIEW FROM OUTSIDE

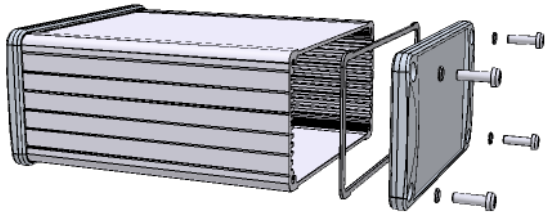

PROTECTION TO IP 65

Enclosures can be Factory Modified (Milling, Drilling, Printing etc.)
Contact Factory mjm@hammondmfg.com for quotes
Solid models of this enclosure available in STEP or IGES.

NOTE	
Purchased assembly includes box, end panels, stainless steel #6 Taptight screws, self adhesive rubber feet, gaskets and O-Rings.	
Box made from Extruded Aluminum 6063.	
End panels made from Type 380 Diecast Aluminum with a black powder paint finish.	
WATERPROOF 1457N1201	
PART NUMBERS	
Clear anodized box with black powder painted end panels	1457N1201
Black powder painted box and end panels	1457N1201BK
EMI/RFI SHIELDED (IP 54)	
Clear anodized box with black powder painted end panels	1457N1201E
Black powder painted box and end panels	1457N1201BKE
ACCESSORIES	
See website for accessories.	

HAMMOND MANUFACTURING™

1457N1201

www.hammondmfg.com