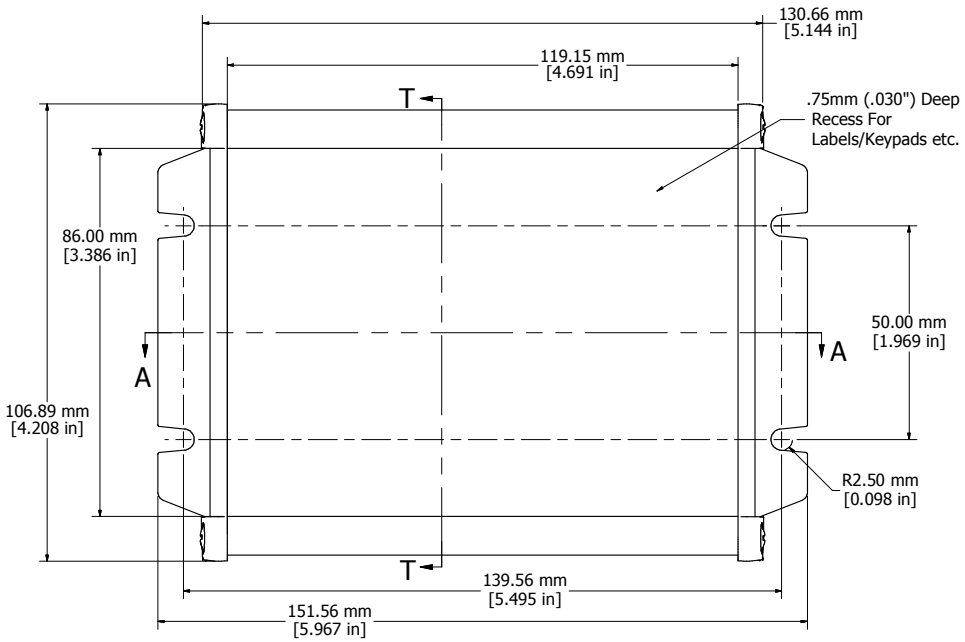

ASSEMBLY - VIEW FROM TOP

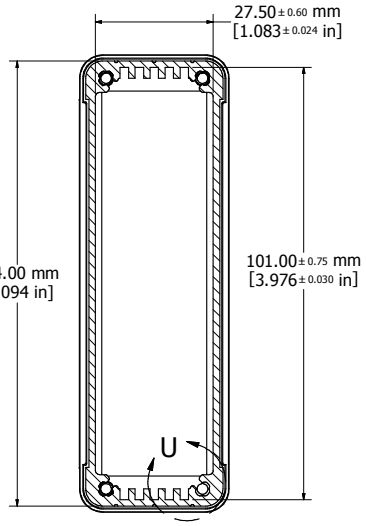

SECTION T-T

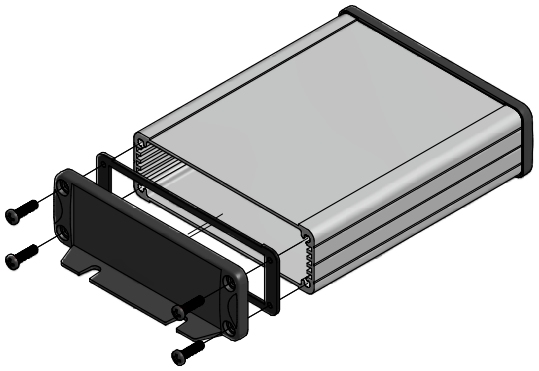

PROTECTION TO IP 65

Enclosures can be Factory Modified (Milling, Drilling, Printing etc.)
Contact Factory mjm@hammondmfg.com for quotes
Solid models of this enclosure available in STEP or IGES.

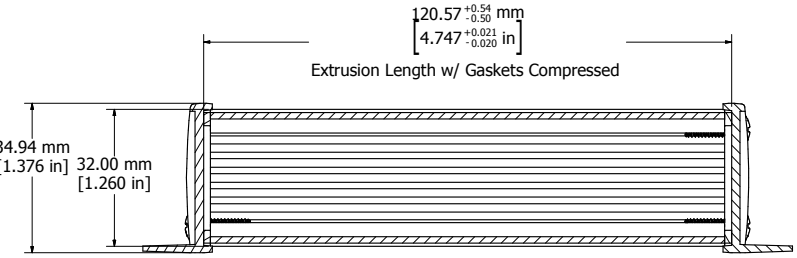

SECTION A-A

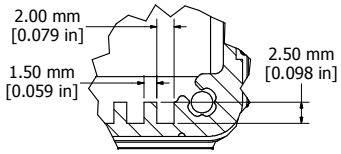

DETAIL U

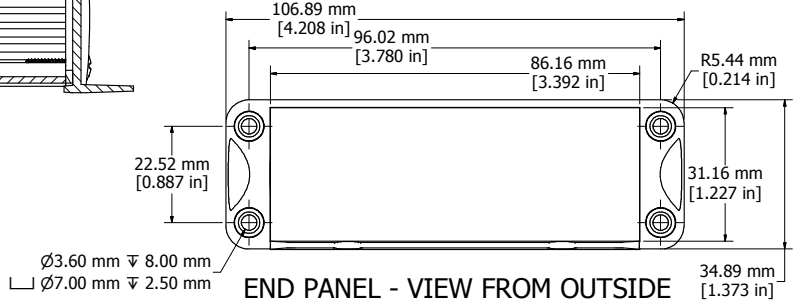

END PANEL - VIEW FROM OUTSIDE

Fits 120mm (4.724") X 100mm (3.149") PCB

NOTE
Purchased assembly includes box, end panels, #6 Taptight screws w/ O-Rings, self adhesive rubber feet, and gaskets
Box made from Extruded Aluminum 6063.
End panels made from ADC-12 Diecast Aluminum with a black powder paint finish.
WATERPROOF 1457L1202

PART NUMBERS	
Clear anodized box with black powder painted end panels	1457L1202
Black powder painted box and end panels	1457L1202BK
EMI/RFI SHIELDED (IP 54)	
Clear anodized box with black powder painted end panels	1457L1202E
Black powder painted box and end panels	1457L1202EBK
ACCESSORIES	
See website for accessories.	

HAMMOND MANUFACTURING™

1457L1202

www.hammondmfg.com