Cases 2, 3 and 4 U



02004005

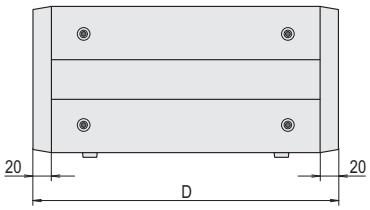

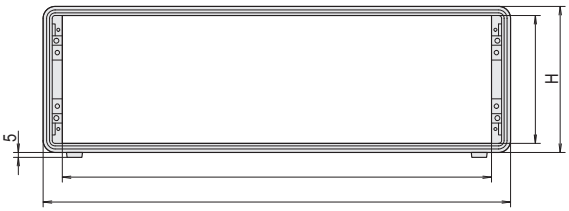

02004054

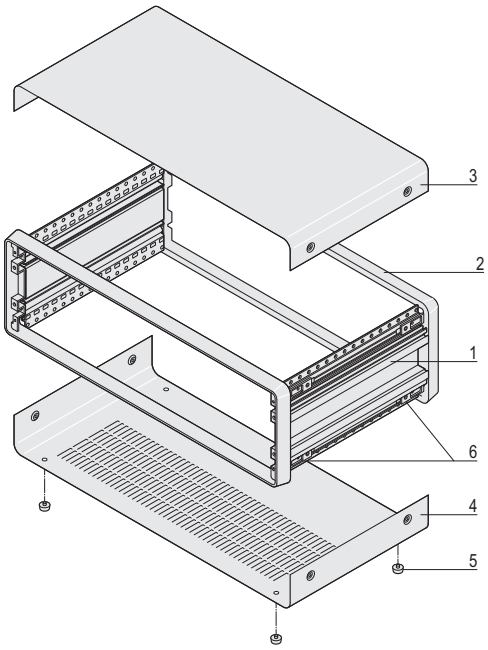

02004053

- Desk-top case, pre-configures, for individual assembly
- For backplane mounting with insulation strips
- Ventilation slots in base plate

Delivery comprises (Kit, items 1 and 2 fitted)

Item	Qty	Description
1	2	Side panel, Al extrusion, powder-coated, RAL 7016
2	2	Frame, Al die-cast, powder-coated, RAL 7016
3	1	Cover plate, Al, 1.5 mm, powder-coated, RAL 9006, with GND/earthing connection
4	1	Base plate with 4 rows of ventilation slots, Al, 1.5 mm, powder-coated RAL 9006, with earthing connection
5	4	Case foot with anti-slip protection, PC, black
6	8	Fixing adaptor for cover plate, prefitted
7	1	Assembly kit, also allows the fitting of a full-width front panel, two cover brackets or a rear panel

Order Information

Height U	Usable width HP	Width W mm	Width w mm	Height H mm	Height h mm	Depth D mm	Part no.
2	42	257	219	102.6	84.4	271	14575-023
2	42	257	219	102.6	84.4	331	14575-025
2	42	257	219	102.6	84.4	391	14575-027
2	84	471	432	102.6	84.4	271	14575-063
2	84	471	432	102.6	84.4	331	14575-065
2	84	471	432	102.6	84.4	391	14575-067
3	28	186	148	147.1	129.3	271	14575-103
3	28	186	148	147.1	129.3	331	14575-105
3	42	257	219	147.1	129.3	271	14575-123
3	42	257	219	147.1	129.3	331	14575-125
3	42	257	219	147.1	129.3	391	14575-127
3	63	364	326	147.1	129.3	271	14575-143
3	63	364	326	147.1	129.3	331	14575-145
3	63	364	326	147.1	129.3	391	14575-147
3	84	471	432	147.1	129.3	271	14575-163
3	84	471	432	147.1	129.3	331	14575-165
3	84	471	432	147.1	129.3	391	14575-167
3	84	471	432	147.1	129.3	451	14575-169
3	84	471	432	147.1	129.3	511	14575-171
4	42	257	219	191.6	173.8	271	14575-223
4	42	257	219	191.6	173.8	331	14575-225
4	63	364	326	191.6	173.8	271	14575-243
4	63	364	326	191.6	173.8	331	14575-245
4	63	364	326	191.6	173.8	391	14575-247
4	84	471	432	191.6	173.8	331	14575-265
4	84	471	432	191.6	173.8	391	14575-267
4	84	471	432	191.6	173.8	451	14575-269
4	84	471	432	191.6	173.8	511	14575-271

For further information www.schroff.biz/oneclick
oneClick search code = Part no.

ServicePLUS see page 5.4