

ASSEMBLY - REAR VIEW (OPEN)

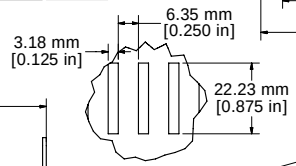

DETAIL A

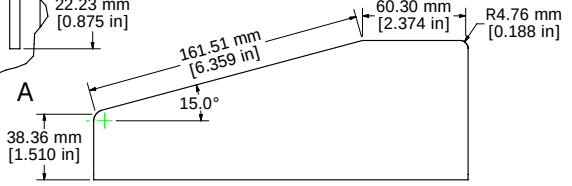

ASSEMBLY - SIDE VIEW (OPEN)

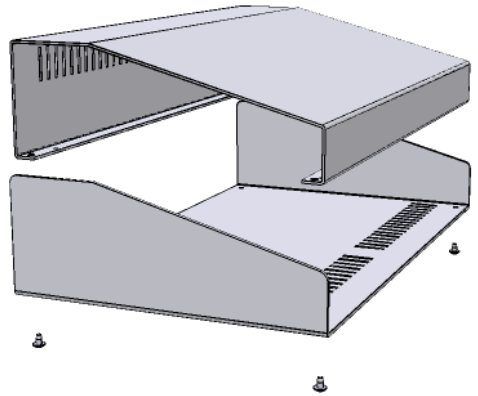

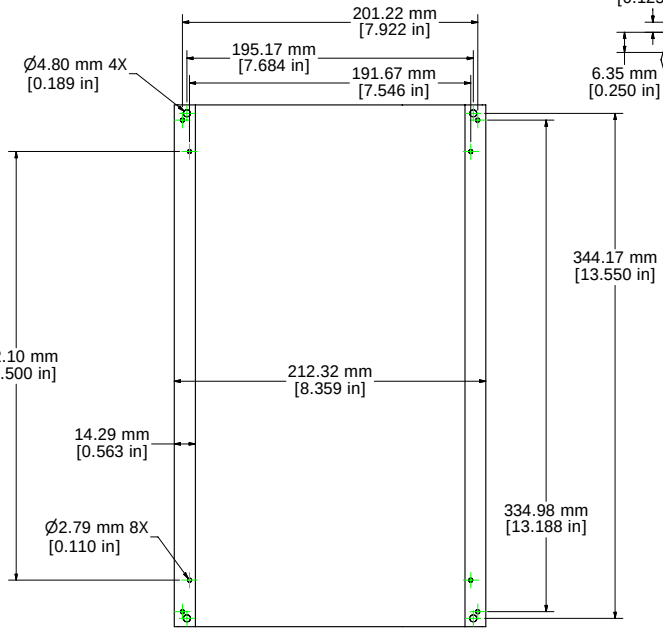

TOP PANEL - BOTTOM VIEW

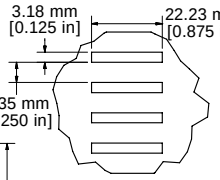

DETAIL B

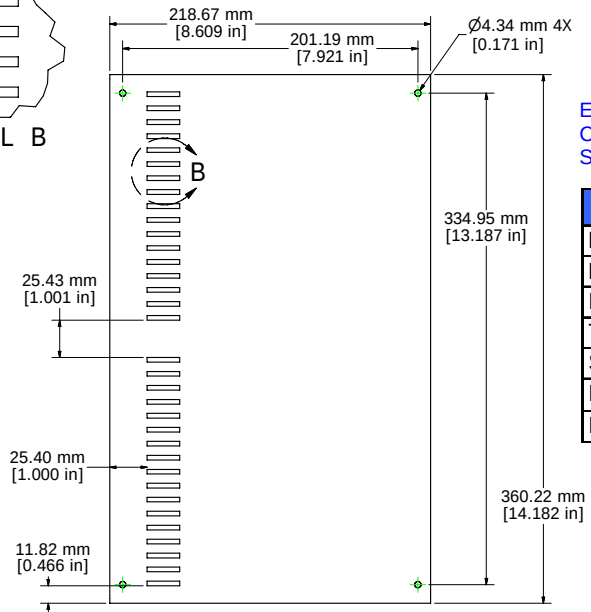

ENCLOSURE CASE - BOTTOM VIEW

Enclosures can be Factory Modified (Milling, Drilling, Printing etc.)
Contact Factory mjm@hammondmfg.com for quotes
Solid models of this enclosure available in STEP or IGES.

1456PH3
Beige Top, Blue Case - **1456PH3WHBU**
Black Top, Blue Case - **1456PH3BKBU**
Enclosure Case - 12 ga. Aluminum
Top Panel Sizes to 14" Wide - 14 ga. Aluminum
Self Adhesive Rubber Feet Included
Reguired Hardware Included
Replacement Screws - 1421-J6 (6 pcs.)

HAMMOND MANUFACTURING™

1456PH3

www.hammondmfg.com