

ASSEMBLY



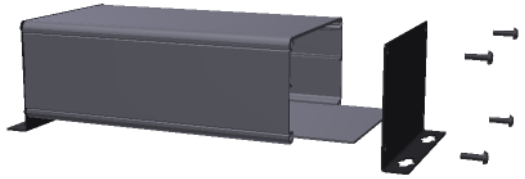

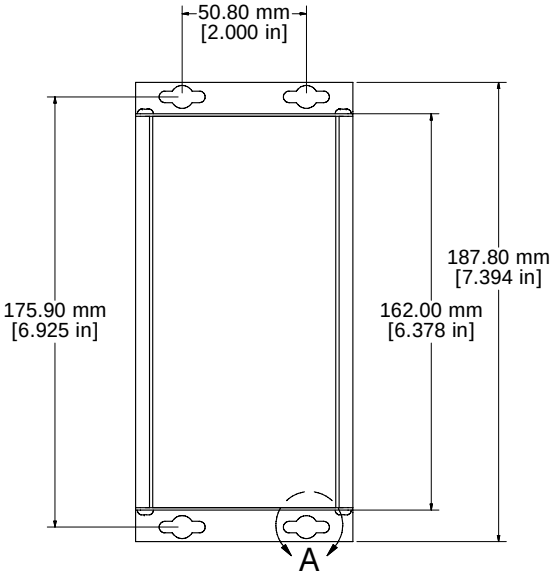

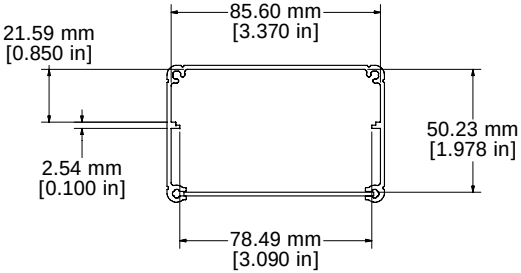

EXTRUSION - INSIDE

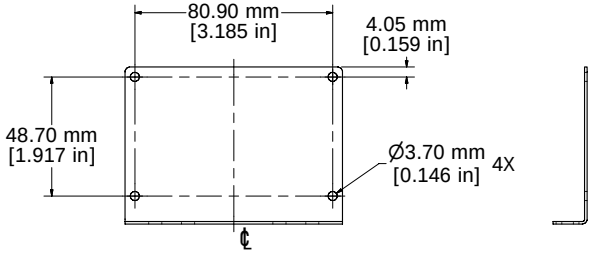

FLANGE

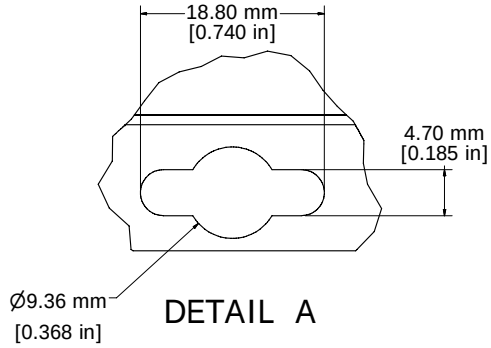

DETAIL A

Enclosures can be Factory Modified (Milling, Drilling, Printing etc.)
Solid models of this enclosure available in STEP or IGES.
Contact Factory mjm@hammondmfg.com

NOTE
Purchased assembly includes box, belly plate, flanges and cover screws. Box made from extruded aluminum 6063.

HAMMOND MANUFACTURING™

1455ZT1601

www.hammondmfg.com