1455L1202

Extrusion

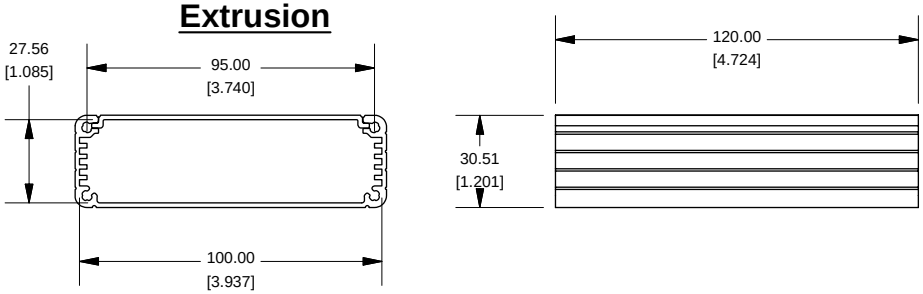

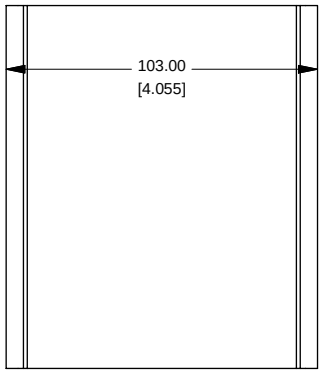

Slot Details

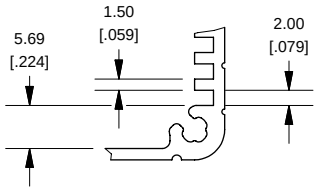

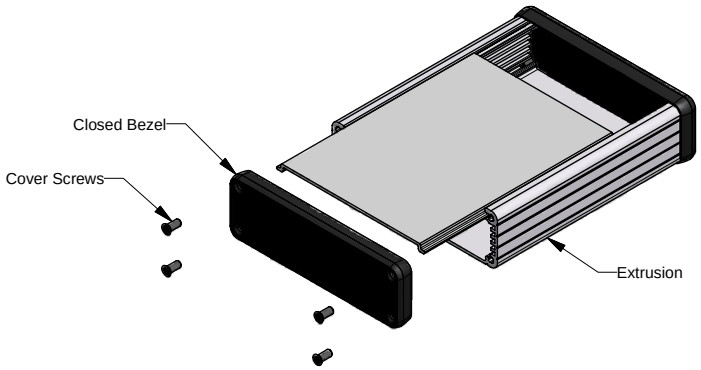

Closed Bezel

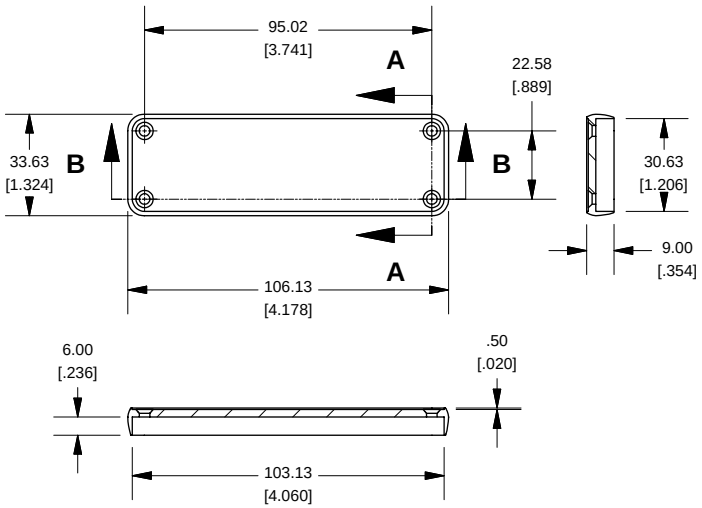

Note
Purchased assembly includes box, belly plate, bezel, cover screws and self adhesive rubber feet. Box made from Extruded Aluminum 6063.

PART NUMBERS	
1455L1202 Closed Plastic Bezel	
Clear Anodized	1455L1202
Black Anodized	1455L1202BK
ACCESSORIES	
Cover Screws (Pkg 100) [#6 Self Tapping Nickel Plated Screws]	1455MS100
Black Cover Screws (Pkg 100) [#6 Self Tappng Nickel Plated Screws]	1455MS100BK
Closed Plastic Bezels, Black (Pkg 10)	1455LPLBK-10

HAMMOND MANUFACTURING™

www.hammondmfg.com