1455J1602

Extrusion

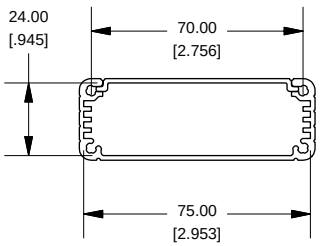

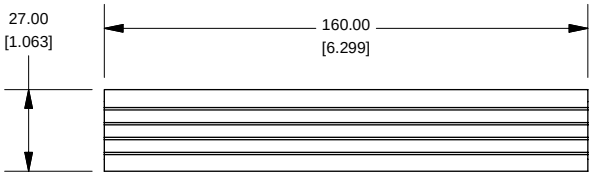

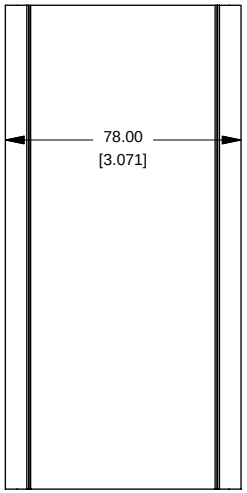

Slot Details

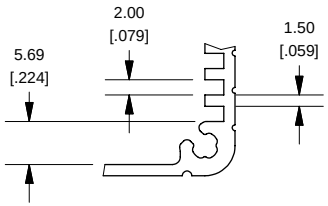

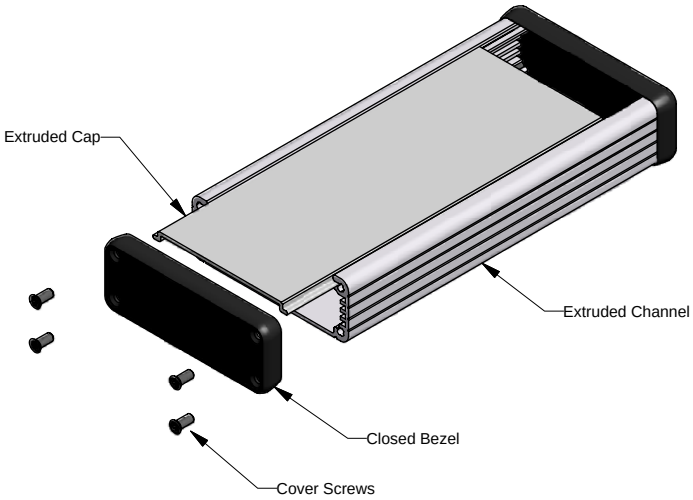

Closed Bezel

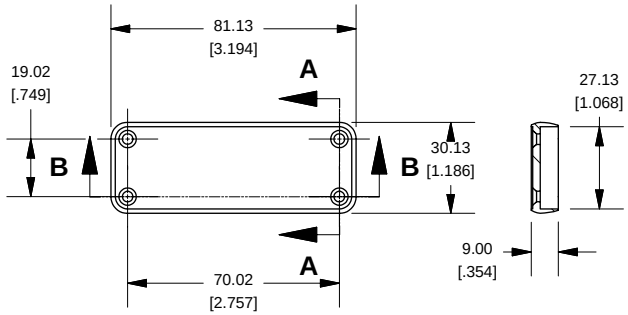

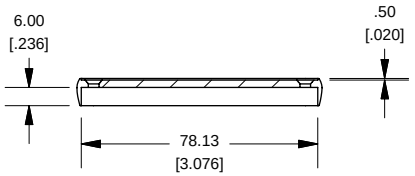

Note
Purchased assembly includes box, belly plate, bezel, cover screws and self adhesive rubber feet. Box made from Extruded Aluminum 6063.

PART NUMBERS	
1455J1602 Closed Plastic Bezel	
Clear Anodized	1455J1602
Black Anodized	1455J1602BK
ACCESSORIES	
Cover Screws (Pkg 100) [#6 Self Tapping Nickel Plated Screws]	1455MS100
Black Cover Screws (Pkg 100) [#6 Self Tappng Nickel Plated Screws]	1455MS100BK
Closed Plastic Bezels, Black (Pkg 10)	1455JPLBK-10

HAMMOND MANUFACTURING™

www.hammondmfg.com