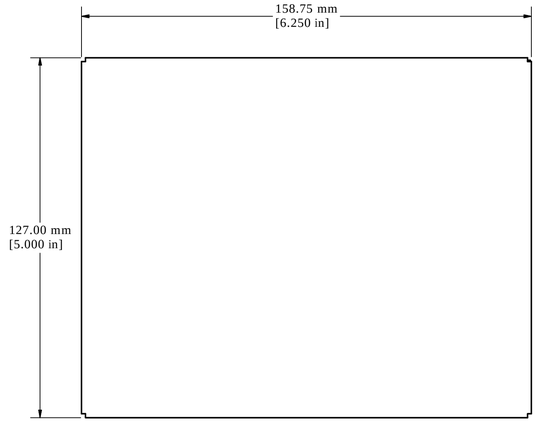

TOP VIEW OF ASSEMBLY

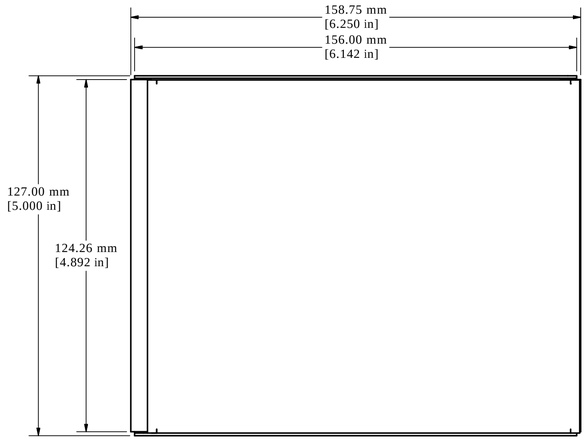

BOTTOM VIEW OF ASSEMBLY

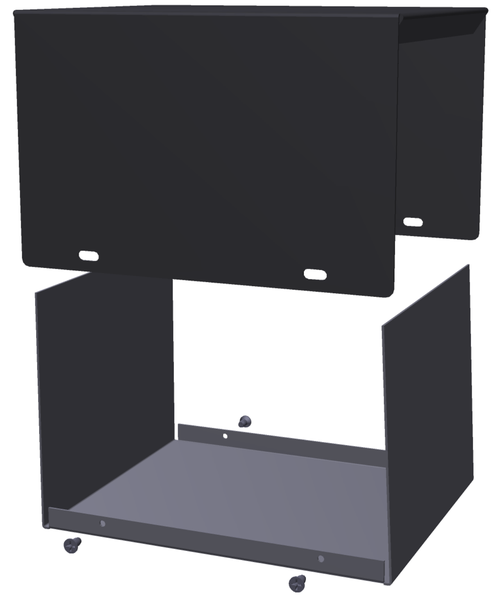

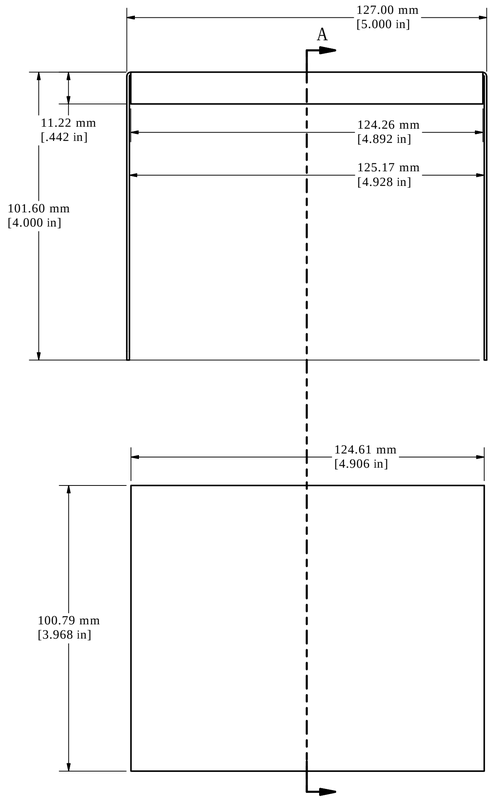

END VIEW OF EXPLODED ASSEMBLY

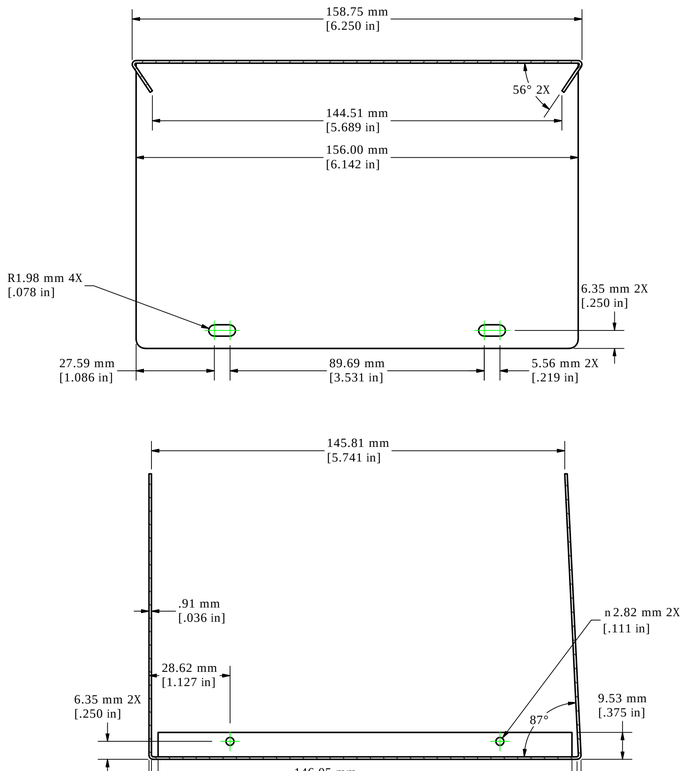

SECTION A-A
SIDE SECTION VIEW OF EXPLODED ASSEMBLY

Contact Factory mjm@hammondmfg.com for quotes
Enclosures can be Factory Modified (Milling, Drilling, Printing etc.)
Solid models of this enclosure available in STEP or IGES.

1454D
Material: 20 ga. Steel, Gray color
Cover: 20 ga. Steel, Textured black finish
Screws: 4 Supplied (#6-32 X 1/4" self tap)
Feet: Self-Adhesive rubber

HAMMOND MANUFACTURING™

1454L

www.hammondmfg.com