HAMMOND MANUFACTURING

Quality Products. Service Excellence.

Type 4X Stainless Steel Wallmount Disconnect Enclosure *1447S*

N4 SS Series

Continuous Hinge Door with Clamps (Flange w/ multi-vendor cutout)



Inner Panel Included

Application

- Designed to house the following safety disconnect equipment:
  - **ABB Controls** flange mounted variable depth operating mechanisms for disconnect switches and circuit breakers. Cable version for circuit breakers also available.
  - **Allen Bradley** 1494V variable depth flange mounted disconnect switches and circuit breaker operators NEMA 4 rated. Will not accept Allen Bradley 1494F disconnect switches, 1494D circuit breaker operators or 1494V-R1, -R2, or -W2 operating handles).
  - **Cutler Hammer** C361 variable depth flange mounted disconnect switches and C371 circuit breaker operators. Also Flex-Shaft™ handle mechanisms for circuit breakers. Use Cutler Hammer NEMA 4X rated operating handles to maintain NEMA 4X integrity.
  - **Siemens I-T-E Max-Flex™** flange mounted variable depth handles for disconnect switch and circuit breakers. Use handle for NEMA 4 rating.
  - **General Electric** Type STDA flange handles and variable depth operating mechanisms for disconnect switches and circuit breakers. Also SpectraFlex™ cable operators for circuit breakers.
  - **Square D** Class 9422 disconnect switches with flange mounted variable depth operating mechanisms or cable mechanisms and Class 9422 flange mounted variable depth operating mechanism or cable mechanisms for circuit breakers. SN4SS enclosures will not accept Square D Class 9422 bracket-mounted disconnect devices, 9422TG1 or TG2 devices.

Standards

- UL 508 Type 3R, 4 and 4X
- CSA Type 3R, 4 and 4X
- **Complies with**
  - NEMA Type 3R, 4, 4X, 12 and 13
  - JIC EGP-1-1967
  - IEC 60529, IP66
- Appropriate components are required to maintain these standards.

Construction

- Formed 14 gauge type 304 stainless steel.
- Continuously welded seams.
- Larger sizes include door and body stiffeners.
- Formed lip on door and enclosure exclude flowing liquids and contaminants.
- Cutouts and holes are provided to suit the flange handle operating

mechanism.
- Continuously hinged doors may be removed by pulling the stainless steel hinge pin.
- Door is secured with easily operated stainless steel clamps.
- Cover interlock bracket is welded to the door.
- Collar studs are provided for mounting inner panels.
- A removable 12 gauge inner panel is included.
- Seamless poured-in place gasket.
- A bonding stud is provided on the door and a grounding stud is provided in the enclosure.
- A literature pocket is provided for the inside of the door.

Finish

- Disconnects and operating mechanisms are not provided with the enclosure, and must be ordered separately from the manufacturer.

Accessories

- Inner Panels
- Blowers and Fans
- Door Stop Kit
- Heaters
- Window Kits
- Cooling Products
- Ventilation
- Filtered Fans
- Temperature Controls

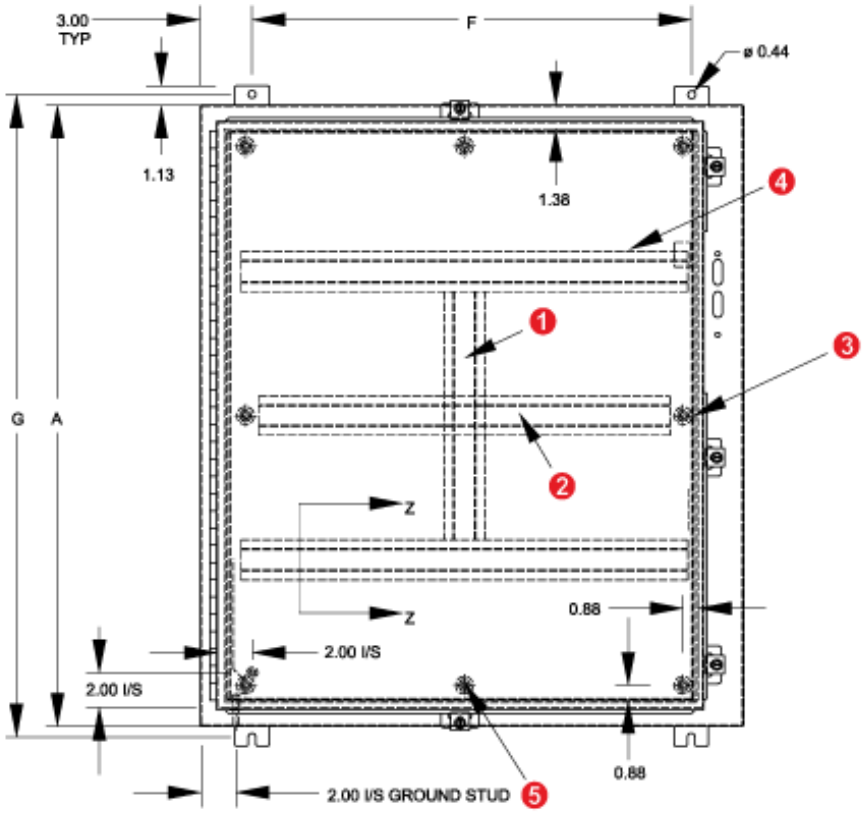

Front View

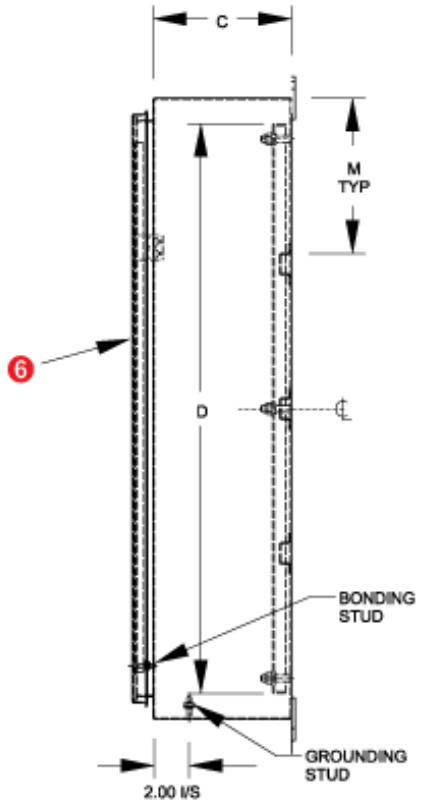

Cross Section

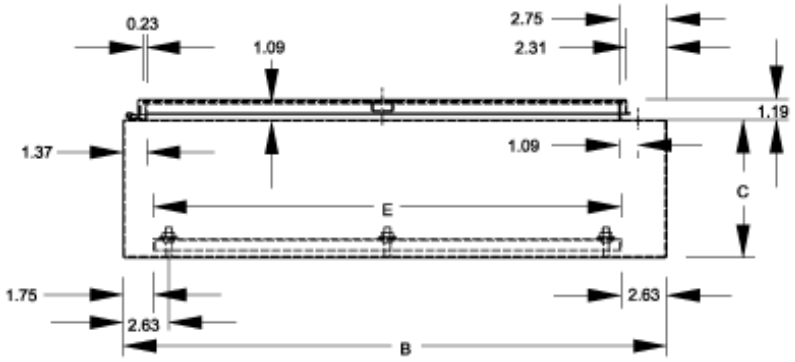

Top View

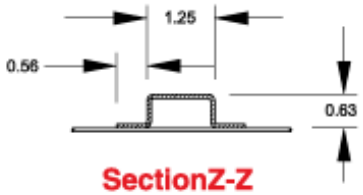

SectionZ-Z

When A=	M=
36	9.00
42	9.88
48	11.38

1. Vertical body stiffener req'd on 1447SN4SSG8 only.
2. Omit center body stiffener if A is less than 41".
3. Omit 2 middle studs if A is less than 31".
4. Omit body stiffeners if B is 28" or less
5. Omit 2 middle studs if B is less than 32".
6. Omit door stiffener if B is 32" or less except if AxB is 42"x31.38".

Note: Number of door clamps varies to enclosure size.

				Panel Size		Mounting Centers		Ship Wt.
Part No.	A	B	C	D	E	F	G	(lbs)
1447SN4SSB8	24.00	21.38	8.00	21.00	17.00	15.38	25.25	60
1447SN4SSC8	24.00	25.38	8.00	21.00	21.00	19.38	25.25	73
1447SN4SSE8	30.00	25.38	8.00	27.00	21.00	19.38	31.25	90
1447SN4SSF8	36.00	25.38	8.00	33.00	21.00	19.38	37.25	100
1447SN4SSG8	36.00	31.38	8.00	33.00	27.00	25.38	37.25	123
1447SN4SSH12	42.00	31.38	12.00	39.00	27.00	25.38	43.25	152
1447SN4SSJ12	42.00	37.38	12.00	39.00	33.00	31.38	43.25	200
1447SN4SSK12	48.00	37.38	12.00	45.00	33.00	31.38	49.25	220
1447SN4SSL12	60.00	37.38	12.00	57.00	33.00	31.38	61.25	265

© 2015. Hammond Manufacturing Ltd. All rights reserved.