HAMMOND MANUFACTURING

Quality Products. Service Excellence.

Type 4 Mild Steel Wallmount Disconnect Enclosure *1447S N4 Series*

Continuous Hinge Door with Clamps (Flange w/ multi-vendor cutout)



Inner Panel Included

Application

- Designed to house the following safety disconnect equipment:
  - **ABB Controls** flange-mounted variable depth operating mechanism for disconnect switches and circuit breakers. Cable version for circuit breakers also available.
  - **Allen Bradley** 1494V variable depth flange mounted disconnect switches and circuit breaker operators NEMA 4 rated. Will not accept Allen Bradley 1494F disconnect switches, 1494D circuit breaker operators or 1494V-R1, -R2, or -W2 operating handles.
  - **C-H Westinghouse** C361 variable depth flange mounted disconnect switches and C371 circuit breaker operators, and also Flex-Shaft™ handle mechanism for circuit breakers. Use Cutler Hammer NEMA 4 rated operating handles to maintain NEMA 4 integrity.
  - **General Electric** Type STDA flange handles and variable depth operating mechanism for disconnect switches and circuit breakers. Also Spectra-Flex™ cable operators for circuit breakers.
  - **Siemens I-T-E Max-Flex™** flange mounted variable depth handles for disconnect switches and circuit breakers. Use handle for NEMA 4.
  - **Square D** class 9422 disconnect switches with flange-mounted variable depth operating mechanisms or cable mechanisms and Class 9422 flange-mounted variable depth operating mechanisms or cable mechanisms for circuit breakers. SN4 enclosures will not accept Square D Class 9422 bracket-mounted disconnect devices, 9422TG1 or TG2 devices.

Standards

- UL 508 Type 3R, 4
- CSA Type 3R, 4
- **Complies with**
  - NEMA Type 3R, 4, 12
  - JIC EGP-1-1967
  - IEC 60529, IP66
- Appropriate components are required to maintain these standards.

Construction

- Formed 14-gauge steel.
- Continuously welded seams.
- Larger sizes include door and body stiffeners.
- Welded brackets provide for enclosure mounting.
- Formed lip on door and enclosure exclude flowing liquids and contaminants.
- Cutouts and holes are provided to suit the flange handle operating

mechanism.
- Continuously hinged doors may be removed by pulling the stainless steel hinge pin.
- Door is secured with easily operated stainless steel clamps.
- Cover interlock bracket is welded to the door.
- Collar studs are provided for mounting inner panels.
- A removable 12 gauge inner panel is included.
- Seamless poured-in place gasket.
- A bonding stud is provided on the door and a grounding stud is provided in the enclosure.
- A literature pocket is provided for the inside of the door.

Finish

- Disconnects and operating mechanisms are not provided with the enclosure, and must be ordered separately from the manufacturer.

Accessories

- Inner Panels
- Blowers and Fans
- Door Stop Kit
- Filtered Fans
- Temperature Controls
- Cooling Products
- Ventilation
- Drip Shield Kit
- Heaters
- Window Kits

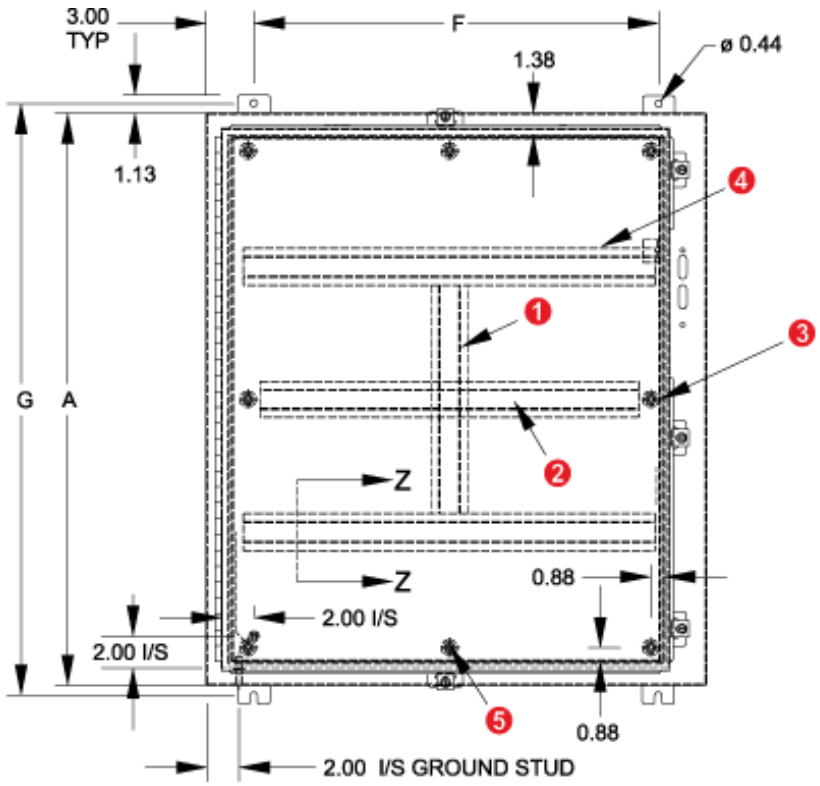

Front View

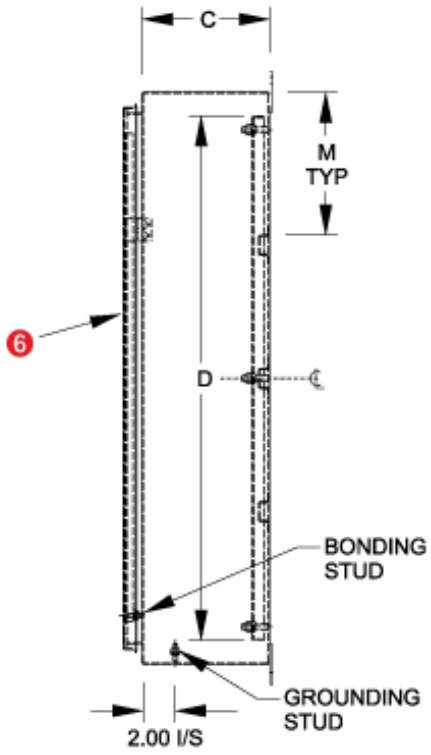

Formed View

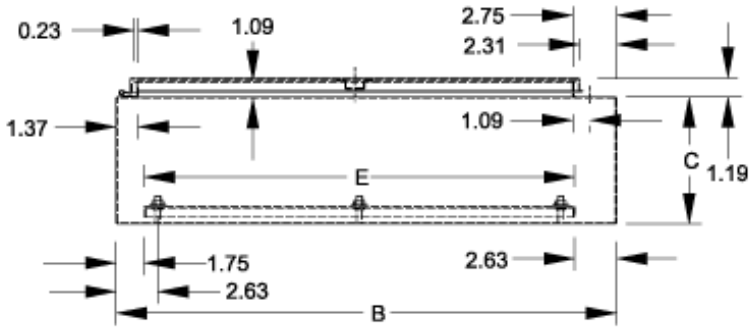

Top View

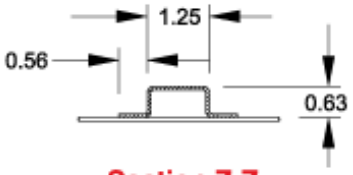

Section Z-Z

When A=	M=
36	9.00
42	9.88
48	11.38

1. Vertical body stiffener req'd on 1447SN4G8 only.
2. Omit center body stiffener if A is less than 41".
3. Omit 2 middle studs if A is less than 31".
4. Omit body stiffeners if B is 28" or less
5. Omit 2 middle studs if B is less than 32".
6. Omit door stiffener if B is 32" or less except if AxB is 42"x31.38".

Note: Number of door clamps varies to enclosure size.

				Panel Size		Mounting Centers		Ship Wt.
Part No.	A	B	C	D	E	F	G	(lbs)
1447SN4B8	24.00	21.38	8.00	21.00	17.00	15.38	25.25	60
1447SN4C8	24.00	25.38	8.00	21.00	21.00	19.38	25.25	73
1447SN4E8	30.00	25.38	8.00	27.00	21.00	19.38	31.25	90
1447SN4F8	36.00	25.38	8.00	33.00	21.00	19.38	37.25	100
1447SN4G8	36.00	31.38	8.00	33.00	27.00	25.38	37.25	123
1447SN4H12	42.00	31.38	12.00	39.00	27.00	25.38	43.25	152
1447SN4J12	42.00	37.38	12.00	39.00	33.00	31.38	43.25	200
1447SN4K12	48.00	37.38	12.00	45.00	33.00	31.38	49.25	220
1447SN4L12	60.00	37.38	12.00	57.00	33.00	31.38	61.25	265

Data subject to change without notice

© 2015. Hammond Manufacturing Ltd. All rights reserved.