Bottom View of Assembly

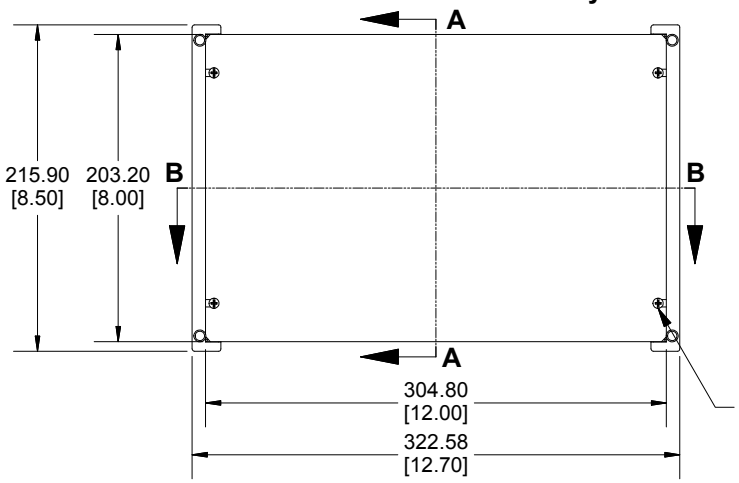

SECTION A-A
End View of Assembly

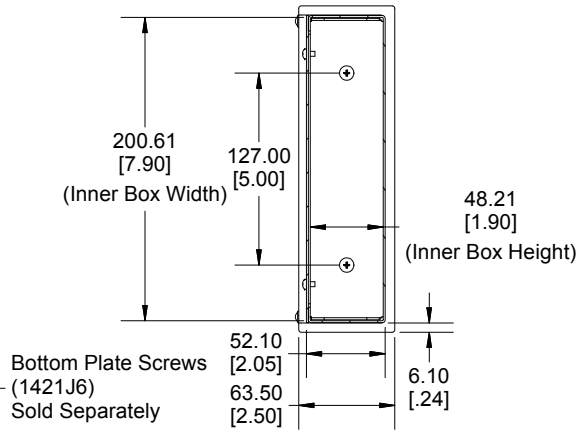

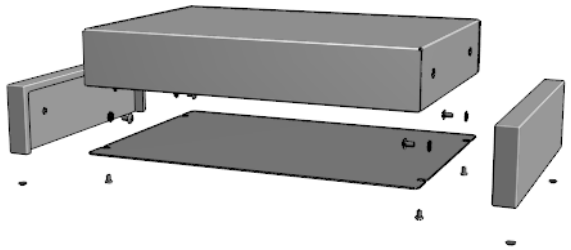

SECTION B-B
Side View of Assembly

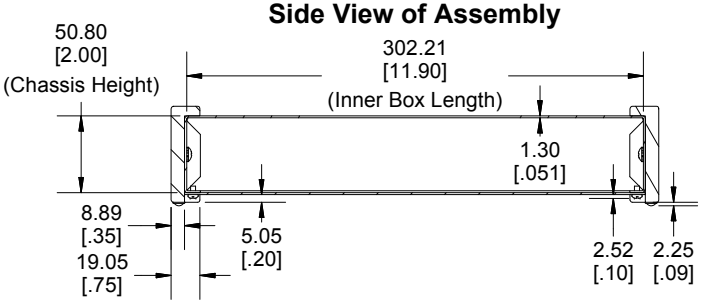

Bottom View of Chassis Assembly
(Sold Separately)

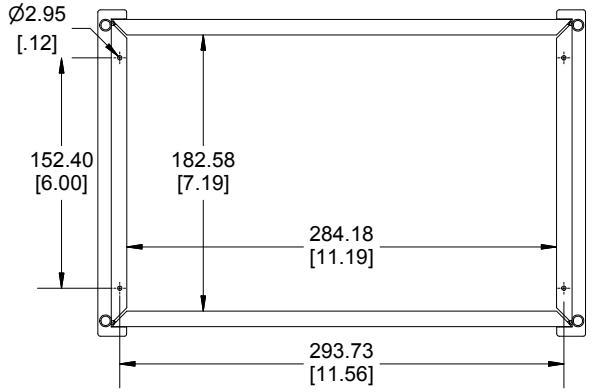

Bottom Plate
(Sold Separately)

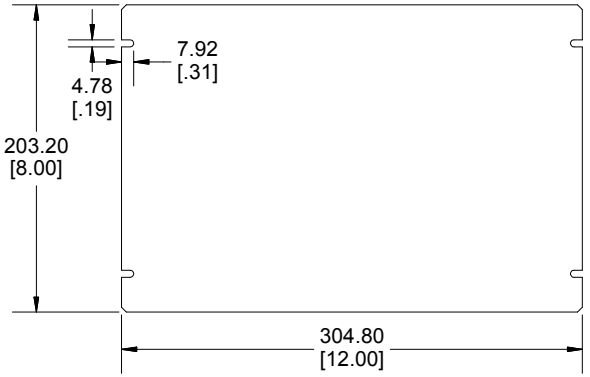

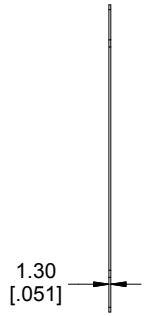

Enclosures can be Factory Modified (Milling, Drilling, Printing etc.)
Contact Factory mjm@hammondmfg.com for quotes
Solid models of this enclosure available in STEP or IGES.

NOTE
Chassis Includes Wooden Sides, Adhesive Rubber Feet and Required Hardware
Chassis is Made of 0.051" Aluminum.
Bottom Plate is Made of 0.051" Aluminum. (Sold Separately)
Screws should not be torqued past 4.43 lbf.in (50 cN.m)

PART NUMBERS	
1444-22CWW Enclosure	
Natural Finish Chassis	1444-22CWW
ACCESSORIES	
Natural Finish Bottom Plate	1434-22
Plated Cover Screws (Pkg 6) [6-32 x 1/4" Self-Tapping Screws]	1421J6
Clear Self-Adhesive Rubber Feet (Pkg 24)	1421T6CL

Dimensions:
mm
[inches]

HAMMOND MANUFACTURING™

1444-22CWW

www.hammondmfg.com