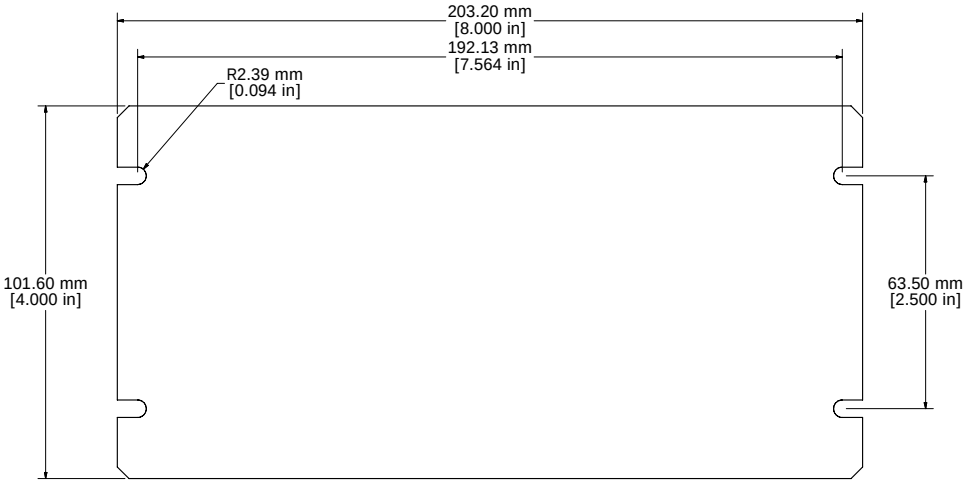

1431-10 OR 1431-10BK3 - VIEW FROM TOP (SOLD SEPERATELY)



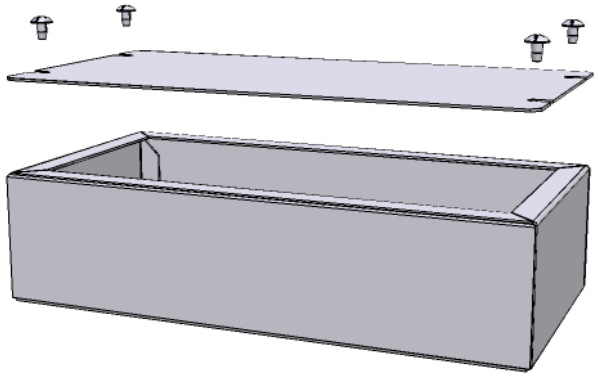

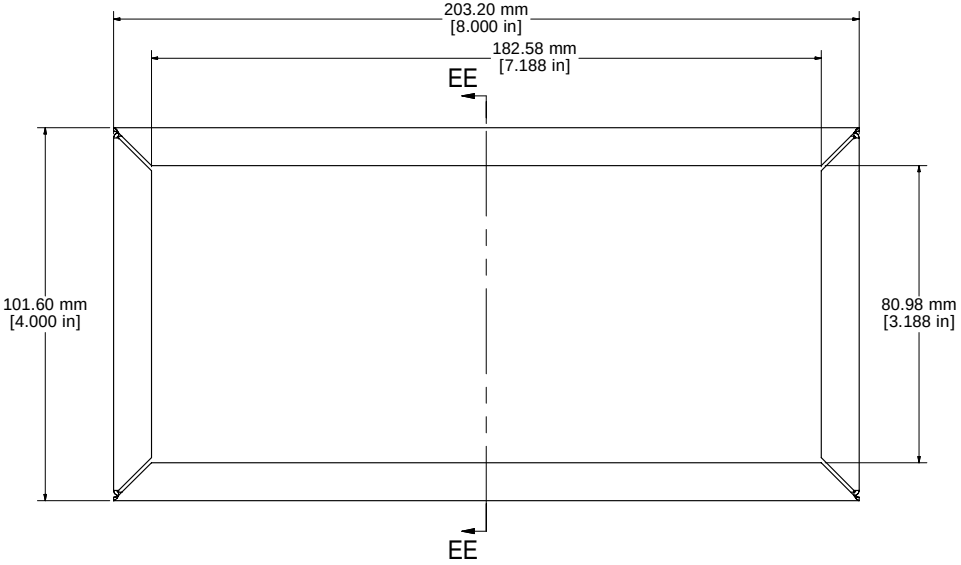

1441-10 OR 1441-10BK3 - VIEW FROM TOP (SOLD SEPERATELY)

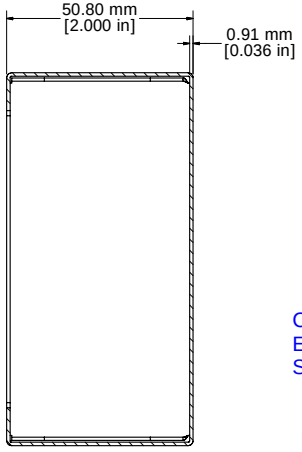

SECTION EE-EE

- CHASIS - 0.036" 20 GAUGE STEEL - ASA 61 GREY - 1441-10
- COVER - 0.036" 20 GAUGE STEEL - ASA 61 GREY - 1431-10
- CHASIS - 0.036" 20 GAUGE STEEL - BLACK - 1441-10BK3
- COVER - 0.036" 20 GAUGE STEEL - BLACK - 1431-10BK3
- SCREWS (6-32 x 1/4 SHEET METAL SCREWS) (SOLD SEPERATELY) - 1421J6

Contact Factory mjm@hammondmfg.com for quotes
Enclosures can be Factory Modified (Milling, Drilling, Printing etc.)
Solid models of this enclosure available in STEP or IGES.

HAMMOND MANUFACTURING™

1441-10

www.hammondmfg.com