HAMMOND MANUFACTURING

Quality Products. Service Excellence.

Type 12 Mild Steel Junction Box *1436/1438 Series*

Lift-Off Cover with Screws



Application

- Designed for use as instrument enclosures, electrical junction boxes or terminal wiring enclosures.
- Provides a degree of protection from falling dirt, dust, oil and water.

Standards

- UL 508 Type 12 and 13
- CSA Type 12 and 13
- Complies with
  - NEMA Type 12 and 13
  - IEC 60529, IP54

Construction

- Formed from 14 gauge steel.
- Smooth, continuously welded seams without knockouts, cutouts or holes.
- Welded brackets provide for enclosure mounting.
- Lift off cover is secured with captive, plated steel screws, and supported on internal hinges except as noted on charts at bottom and right.
- Cover screws fasten into threaded, sealed wells.
- Oil resistant gaskets are permanently secured.
- A bonding stud is provided on the door and a grounding stud is provided on the enclosure.

Finish

- Cover and enclosure are phosphatized and finished in ANSI 61 gray recoatable powder coating.

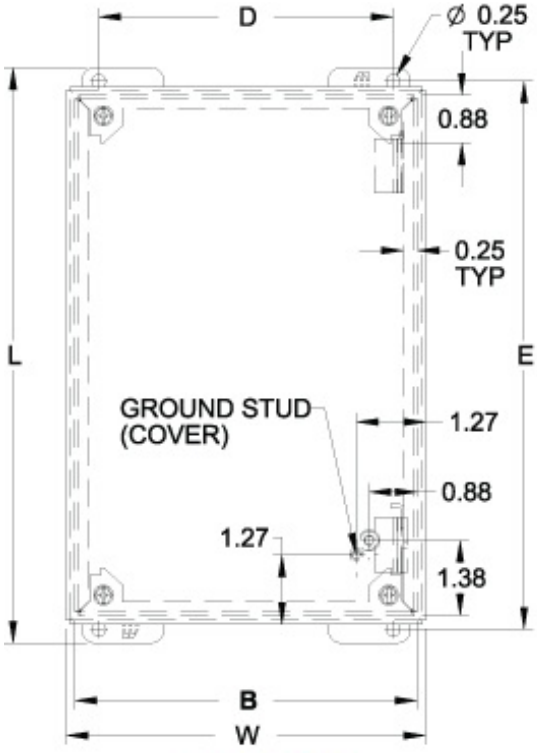

Front View
Body Type 1436F through V
Body Type 1438B through V
(Hinged)

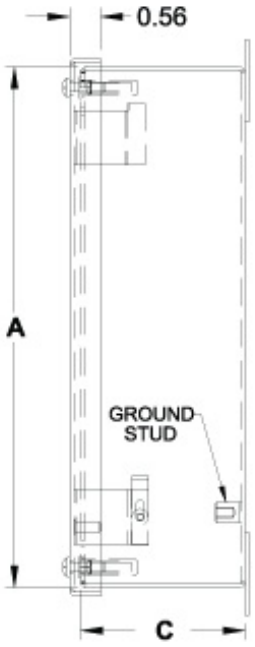

Side View

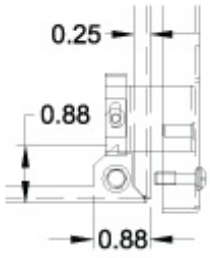

Hinge Detail
Retractable pin allows door to be mounted on left or right side

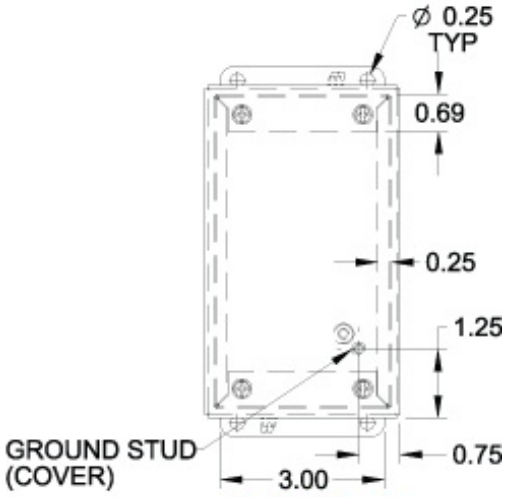

Front View
Body Type 1436A through D
Body Type 1438A
(Not Hinged)

Standard Depth Series (1436)

				Centers		Overall Dimensions		Ship Wt.
Part No.	A	B	C	D	E	L	W	(lbs)
1436A[1]	3.50	3.25	2.75	2.38	4.00	4.50	3.56	2
1436B[1]	5.75	3.25	2.75	2.38	6.25	6.75	3.56	2
1436C[1]	8.00	3.25	2.75	2.38	8.50	9.00	3.56	3
1436D[1]	10.25	3.25	2.75	2.38	10.75	11.25	3.56	4
1436F	7.25	6.25	3.00	5.38	7.75	8.25	6.56	5
1436H	9.50	6.25	3.00	5.38	10.00	10.50	6.56	5
1436K	9.50	8.50	3.00	7.63	10.00	10.50	8.81	7
1436O	11.75	8.50	3.00	7.63	12.25	12.75	8.81	8
1436S	11.75	10.75	3.00	9.88	12.25	12.75	11.06	9
1436V	14.00	10.75	3.00	9.88	14.50	15.00	11.06	11

[1] Not hinged

Extra Deep Series (1438)

		Ship Wt.

Part No.	A	B	C	D	E	L	W	(lbs)
1438A[1]	4.00	4.00	4.75	3.13	4.50	5.00	4.31	3
1438B	6.00	4.00	4.75	3.13	6.50	7.00	4.31	4
1438C	8.00	4.00	4.75	3.13	8.50	9.00	4.31	5
1438D	10.00	4.00	4.75	3.13	10.50	11.00	4.31	5
1438F	7.25	6.25	4.75	5.38	7.75	8.25	6.56	5
1438H	9.50	6.25	4.75	5.38	10.00	10.50	6.56	5
1438K	9.50	8.50	4.75	7.63	10.00	10.50	8.81	7
1438O	11.75	8.50	4.75	7.63	12.25	12.75	8.81	8
1438S	11.75	10.75	4.75	9.88	12.25	12.75	11.06	9
1438V	14.00	10.75	4.75	9.88	14.50	15.00	11.06	11

[1] Not hinged

Data subject to change without notice.

© 2012. Hammond Manufacturing Ltd. All rights reserved.