

DIN 7991 | ~ISO 10642

Standard withdrawn

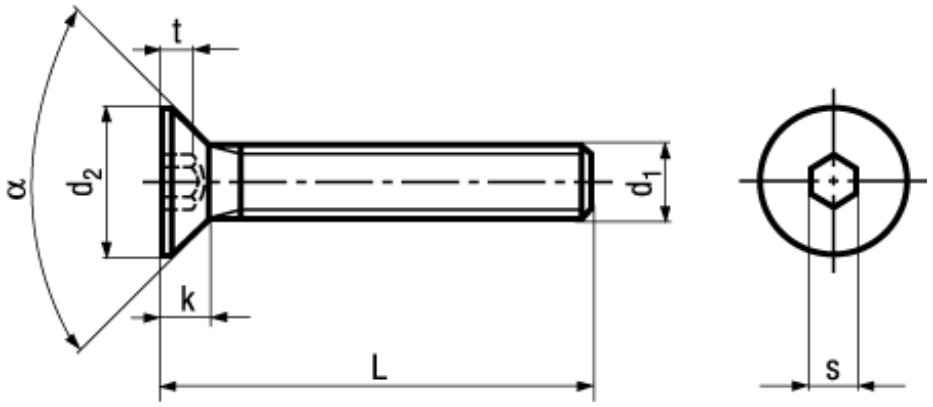

BN 616

Flat countersunk head socket cap screws

fully threaded

Stainless steel A2

- ~UNI 5933

The general change-over from DIN 7991 to ISO 10642 in the practice requires a verification of the application.

M16; M20: according to ISO 10642

Article#	d_1	d_2 max.	k max.	s	t	α	L
8227381	M3	6	1,7	2	1,2	90°	(5)
1076450							(6)
1076469							8
1076477							10
1076485							12
3146455							(14)
1076493							16
3146456							(18)
1076507							20
1115626							25
1115634							30
1208179	M4	8	2,3	2,5	1,8	90°	(6)
1235184							8
1235192							10
1235206							12
3146457							(14)
1235222							16
3146459							(18)
1235230							20
1448587							25
1448595							30
1076515							35

M16; M20: according to ISO 10642

Article#	d_1	d_2 max.	k max.	s	t	α	L
1448609	M4	8	2,3	2,5	1,8	90°	40
1208187	M5	10	2,8	3	2,3	90°	8
1235249							10
1235257							12
3146461							(14)
1235273							16
3146462							(18)
1235281							20
3146463							(22)
1235303							25
1235311							30
1000241							35
1000268							40
1425277							(45)
1076523							50
1009028							60
3182536							70
1208195	M6	12	3,3	4	2,5	90°	8
1235338							10
1235346							12
3146466							(14)
1235362							16
3146467							(18)
1235370							20
1235389							25
1235397							30
1000462							35
1448617							40
1425285							(45)
1448625							50
5505755							(55)
1076531							60
1208209							70
5522377							80
3213596							100
5505745	M8	16	4,4	5	3,5	90°	10
1208217							12
1235400							16
1235419							20
1235427							25
1235435							30

M16; M20: according to ISO 10642

Article#	d_1	d_2 max.	k max.	s	t	α	L
1076558	M8	16	4,4	5	3,5	90°	35
1235443							40
1425293							(45)
1421832							50
5505746							(55)
1076566							60
1115642							70
1115650							80
3185524							100
1076574	M10	20	5,5	6	4,4	90°	16
1235451							20
1235478							25
1235486							30
1425307							35
1235494							40
1425315							(45)
1421840							50
5505751							(55)
1076582							60
1115669							70
1115677							80
1208225							90
1208233							100
1421859	M12	24	6,5	8	4,6	90°	20
1421867							25
1421875							30
1425323							35
1421883							40
1425331							(45)
1421891							50
1000691							60
1115685							70
1115693							80
1425358							90
1425366							100
1208241	M16	30	7,5	10	5,3	90°	25
1208268							30
1208276							35
1208284							40
1674625							(45)
1208292							50

M16; M20: according to ISO 10642

Article#	d_1	d_2 max.	k max.	s	t	α	L
1208306	M16	30	7,5	10	5,3	90°	60
1674757	M20	36	8,5	12	5,9	90°	40
1674838							(45)
1675745							50
1675753							60