PART No. 1418N4SSY24QT

for more information visit
www.hammfg.com

Data subject to change without notice

Isometric drawing Not to Scale



TOP VIEW

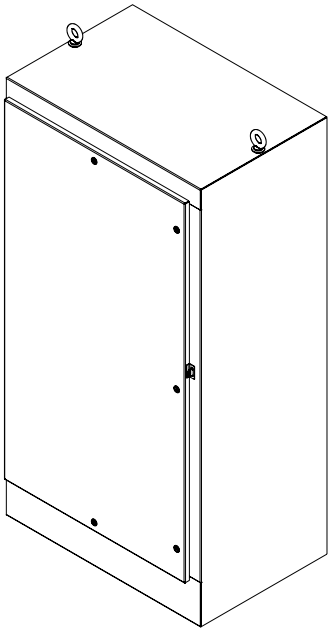

ISOMETRIC VIEW

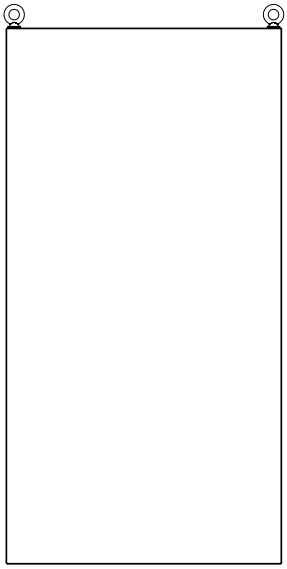

BACK VIEW

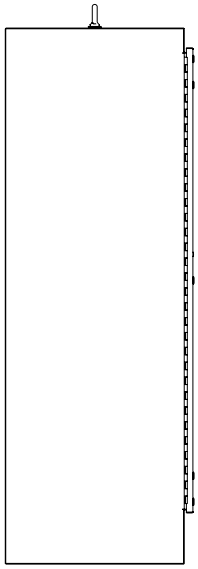

SIDE VIEW

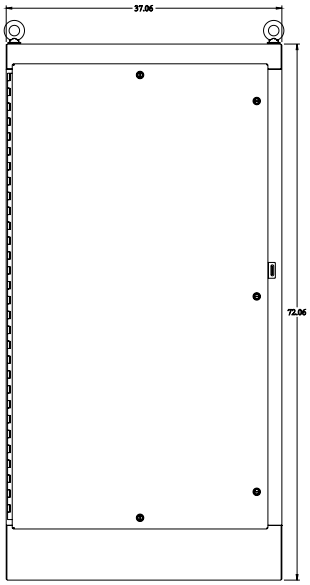

FRONT VIEW

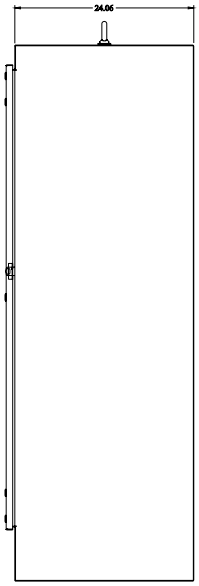

SIDE VIEW

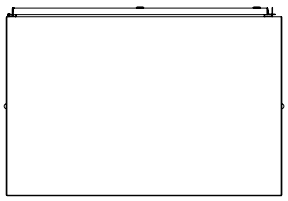

BOTTOM VIEW