HAMMOND MANUFACTURING

Quality Products. Service Excellence.

Type 4X Stainless Steel Wallmount Enclosure *1418 N4*

SS Series

Continuous Hinge Door with Clamps



Inner Panel Included

Application

- Designed for use as instrument enclosures, electric, hydraulic or pneumatic control housings, electrical junction boxes or terminal wiring enclosures.
- Provides protection where equipment may be hosed down or otherwise be very wet, or in specific applications where corrosion is a serious problem.

Standards

- UL 508 Type 3R, 4, 4X, and 12
- CSA Type 3R, 4, 4X, and 12
- Complies with
  - NEMA Type 3R, 4, 4X, 12 and 13
  - JIC EGP-1-1967 unless marked[1]
  - IEC 60529, IP66

Construction

- Formed 14 gauge 304 or 316 stainless steel.
- Smooth, continuously welded seams without knockouts, cutouts or holes.
- Door stiffeners are provided in the larger enclosures for extra rigidity.
- Welded brackets provide for enclosure mounting.
- Formed lip on door and enclosure excludes flowing liquids and contaminants.
- Stainless steel continuous hinge on door may be removed by pulling the stainless steel hinge pin.
- Door is secured with easily operated stainless steel clamps.
- Provision for padlocking.
- Seamless poured-in place gasket.
- A removable 12 gauge inner panel is included.
- Collar studs are provided for mounting inner panels.
- A bonding stud is provided on the door and a grounding stud is provided in the enclosure.
- A literature pocket is provided for the inside of the door.

Finish

- Cover and enclosure are natural stainless steel with a smooth brushed finish.
- Removable inner panel is finished in white powder coating.

Accessories

- Inner Panels
- Blowers and Fans
- Door Clamping Hardware
- Cooling Products
- Ventilation
- Door Stop Kit

- Door Support Guide
- Enclosure Stabilizers
- Filtered Fans
- Lock kit
- Wallmount Quick Release Clamp
- Temperature Controls
- Drip Shield Kit
- Floor Stand Kit
- Heaters
- Type 1 Louvered Ventilating Plates
- Terminal Kits
- Window Kits

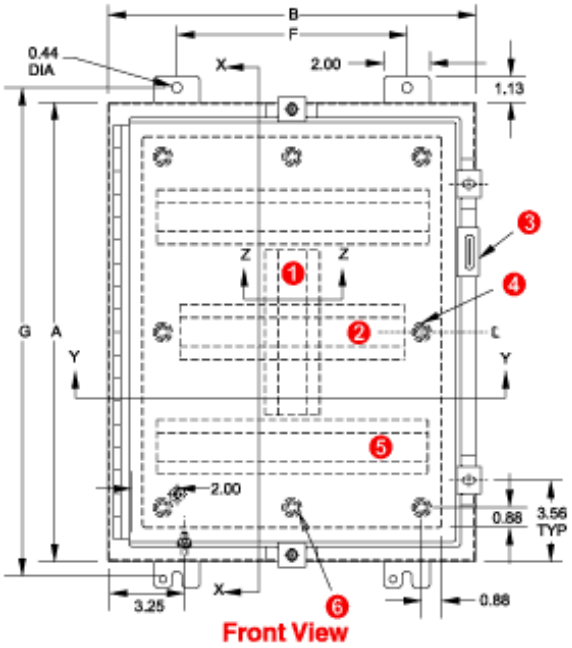

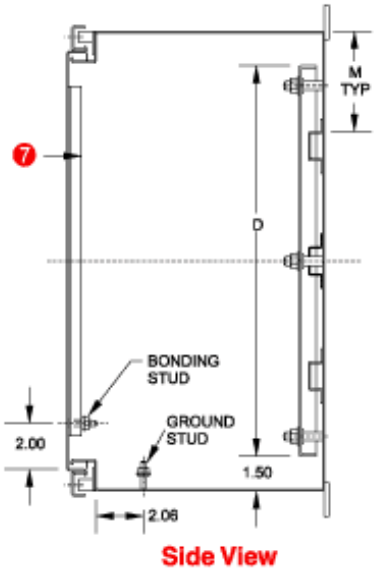

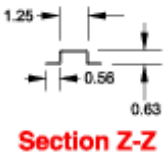

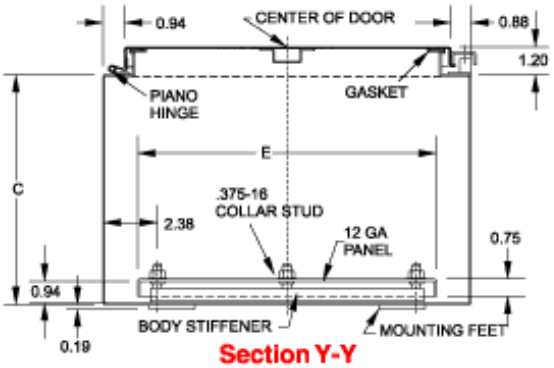

1. Vertical stiffener required on KK, LL & M only.
2. Omit center body stiffener if A is less than 41".
3. Padlocking hasp and staple.
4. Omit 2 middle studs if A is less than 31".
5. Omit body stiffeners if A or B is less than 29".
6. Omit 2 middle studs if B is less than 31".
7. Omit door stiffener if A or B is less than 31" except if AxB is 42"x30".

304 S.S. Part No.	316 S.S. Part No.	A	B	C	Panel Size D	Panel Size E	Mounting Centers F	Mounting Centers G	Ship Wt. (lbs)
1418N4SSB6	**1418N4S16B6**	16.00	12.00	6.00	13.00	9.00	9.50	17.25	28
1418N4SSG6	**1418N4S16G6**	16.00	16.00	6.00	13.00	13.00	10.00	17.25	30
1418N4SSCR6	**1418N4S16CR6**	16.00	20.00	6.00	13.00	17.00	14.00	17.25	38
1418N4SSC6	**1418N4S16C6**	20.00	16.00	6.00	17.00	13.00	10.00	21.25	38
1418N4SSD6	**1418N4S16D6**	20.00	20.00	6.00	17.00	17.00	14.00	21.25	40
1418N4SSE6	**1418N4S16E6**	24.00	20.00	6.00	21.00	17.00	14.00	25.25	61
1418N4SSJ6	**1418N4S16J6**	24.00	24.00	6.00	21.00	21.00	18.00	25.25	65
1418N4SSB8	**1418N4S16B8**	16.00	12.00	8.00	13.00	9.00	9.50	17.25	32
1418N4SSC8	**1418N4S16C8**	20.00	16.00	8.00	17.00	13.00	10.00	21.25	38
1418N4SSD8	**1418N4S16D8**	20.00	20.00	8.00	17.00	17.00	14.00	21.25	52
1418N4SSER8	**1418N4S16ER8**	20.00	24.00	8.00	17.00	21.00	18.00	21.25	61
1418N4SSH8	**1418N4S16H8**	24.00	16.00	8.00	21.00	13.00	10.00	25.25	61
1418N4SSE8	**1418N4S16E8**	24.00	20.00	8.00	21.00	17.00	14.00	25.25	61
1418N4SSJ8	**1418N4S16J8**	24.00	24.00	8.00	21.00	21.00	18.00	25.25	75
1418N4SSKR8	**1418N4S16KR8**	24.00	30.00	8.00	21.00	27.00	24.00	25.25	89

304 S.S.	316 S.S.				Panel Size		Mounting Centers		Ship Wt.
Part No.	Part No.	A	B	C	D	E	F	G	(lbs)
1418N4SSF8	1418N4S16F8	30.00	20.00	8.00	27.00	17.00	14.00	31.25	72
1418N4SSK8	1418N4S16K8	30.00	24.00	8.00	27.00	21.00	18.00	31.25	89
1418N4SSKK8	1418N4S16KK8	30.00	30.00	8.00	27.00	27.00	24.00	31.25	100
1418N4SSL8	1418N4S16L8	36.00	24.00	8.00	33.00	21.00	18.00	37.25	100
1418N4SSM8	1418N4S16M8	36.00	30.00	8.00	33.00	27.00	24.00	37.25	121
1418N4SSP8[1]	1418N4S16P8[1]	42.00	36.00	8.00	39.00	33.00	30.00	43.25	177
1418N4SSS8[1]	1418N4S16S8[1]	48.00	36.00	8.00	45.00	33.00	30.00	49.25	207
1418N4SSC10	1418N4S16C10	20.00	16.00	10.00	17.00	13.00	10.00	21.25	47
1418N4SSE10	1418N4S16E10	24.00	20.00	10.00	21.00	17.00	14.00	25.25	66
1418N4SSK10	1418N4S16K10	30.00	24.00	10.00	27.00	21.00	18.00	31.25	120
1418N4SSL10	1418N4S16L10	36.00	24.00	10.00	33.00	21.00	18.00	37.25	108
1418N4SSM10	1418N4S16M10	36.00	30.00	10.00	33.00	27.00	24.00	37.25	125
1418N4SSO10[1]	1418N4S16O10[1]	42.00	30.00	10.00	39.00	27.00	24.00	43.25	175
1418N4SSS10[1]	1418N4S16S10[1]	48.00	36.00	10.00	45.00	33.00	30.00	49.25	215
1418N4SSJ12	1418N4S16J12	24.00	24.00	12.00	21.00	21.00	18.00	25.25	71
1418N4SSK12	1418N4S16K12	30.00	24.00	12.00	27.00	21.00	18.00	31.25	95
1418N4SSM12	1418N4S16M12	36.00	30.00	12.00	33.00	27.00	24.00	37.25	136
1418N4SSLL12[1]	1418N4S16LL12[1]	36.00	36.00	12.00	33.00	33.00	30.00	37.25	202
1418N4SSS12[1]	1418N4S16S12[1]	48.00	36.00	12.00	45.00	33.00	30.00	49.25	225
1418N4SST12[1]	1418N4S16T12[1]	60.00	36.00	12.00	57.00	33.00	30.00	61.25	270
1418N4SSK16	1418N4S16K16	30.00	24.00	16.00	27.00	21.00	18.00	31.25	100
1418N4SSM16	1418N4S16M16	36.00	30.00	16.00	33.00	27.00	24.00	37.25	149
1418N4SSS16[1]	1418N4S16S16[1]	48.00	36.00	16.00	45.00	33.00	30.00	49.25	290
1418N4SST16[1]	1418N4S16T16[1]	60.00	36.00	16.00	57.00	33.00	30.00	61.25	280

[1] Does not meet JIC requirements.

Data subject to change without notice

© 2015. Hammond Manufacturing Ltd. All rights reserved.