HAMMOND MANUFACTURING

*Quality Products. Service Excellence.*

# Type 4X Stainless Steel Wallmount Enclosure *1418 N4*

## *SS Series*

**Continuous Hinge Door with Clamps**



Inner Panel Included

## Application

- Designed for use as instrument enclosures, electric, hydraulic or pneumatic control housings, electrical junction boxes or terminal wiring enclosures.
- Provides protection where equipment may be hosed down or otherwise be very wet, or in specific applications where corrosion is a serious problem.

## Standards

- UL 508 Type 3R, 4, 4X, and 12
- CSA Type 3R, 4, 4X, and 12
- Complies with
  - NEMA Type 3R, 4, 4X, 12 and 13
  - JIC EGP-1-1967 unless marked[1]
  - IEC 60529, IP66

## Construction

- Formed 14 gauge 304 or 316 stainless steel.
- Smooth, continuously welded seams without knockouts, cutouts or holes.
- Door stiffeners are provided in the larger enclosures for extra rigidity.
- Welded brackets provide for enclosure mounting.
- Formed lip on door and enclosure excludes flowing liquids and contaminants.
- Stainless steel continuous hinge on door may be removed by pulling the stainless steel hinge pin.
- Door is secured with easily operated stainless steel clamps.
- Provision for padlocking.
- Seamless poured-in place gasket.
- A removable 12 gauge inner panel is included.
- Collar studs are provided for mounting inner panels.
- A bonding stud is provided on the door and a grounding stud is provided in the enclosure.
- A literature pocket is provided for the inside of the door.

## Finish

- Cover and enclosure are natural stainless steel with a smooth brushed finish.
- Removable inner panel is finished in white powder coating.

## Accessories

- Inner Panels
- Blowers and Fans
- Door Clamping Hardware
- Cooling Products
- Ventilation
- Door Stop Kit

- Door Support Guide
- Enclosure Stabilizers
- Filtered Fans
- Lock kit
- Wallmount Quick Release Clamp
- Temperature Controls
- Drip Shield Kit
- Floor Stand Kit
- Heaters
- Type 1 Louvered Ventilating Plates
- Terminal Kits
- Window Kits

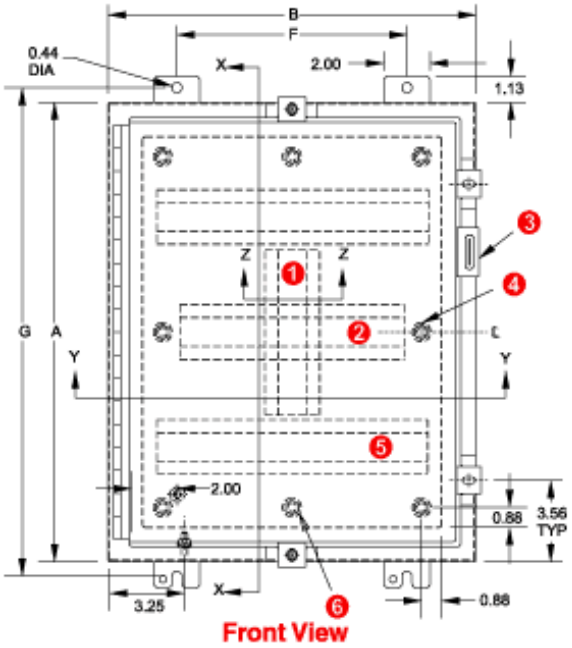


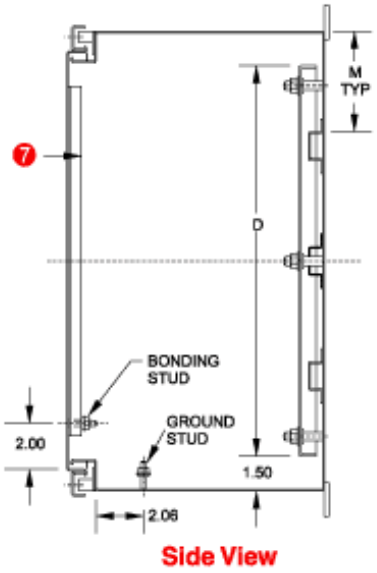


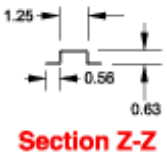


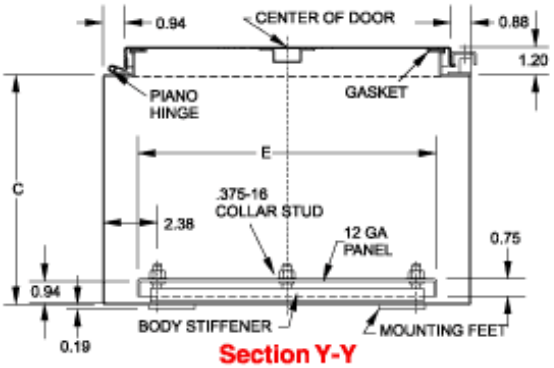


1. Vertical stiffener required on KK, LL & M only.
2. Omit center body stiffener if A is less than 41".
3. Padlocking hasp and staple.
4. Omit 2 middle studs if A is less than 31".
5. Omit body stiffeners if A or B is less than 29".
6. Omit 2 middle studs if B is less than 31".
7. Omit door stiffener if A or B is less than 31" except if AxB is 42"x30".

| 304 S.S. Part No. | 316 S.S. Part No. | A | B | C | Panel Size D | Panel Size E | Mounting Centers F | Mounting Centers G | Ship Wt. (lbs) |
|---|---|---|---|---|---|---|---|---|---|
| **1418N4SSB6** | **1418N4S16B6** | 16.00 | 12.00 | 6.00 | 13.00 | 9.00 | 9.50 | 17.25 | 28 |
| **1418N4SSG6** | **1418N4S16G6** | 16.00 | 16.00 | 6.00 | 13.00 | 13.00 | 10.00 | 17.25 | 30 |
| **1418N4SSCR6** | **1418N4S16CR6** | 16.00 | 20.00 | 6.00 | 13.00 | 17.00 | 14.00 | 17.25 | 38 |
| **1418N4SSC6** | **1418N4S16C6** | 20.00 | 16.00 | 6.00 | 17.00 | 13.00 | 10.00 | 21.25 | 38 |
| **1418N4SSD6** | **1418N4S16D6** | 20.00 | 20.00 | 6.00 | 17.00 | 17.00 | 14.00 | 21.25 | 40 |
| **1418N4SSE6** | **1418N4S16E6** | 24.00 | 20.00 | 6.00 | 21.00 | 17.00 | 14.00 | 25.25 | 61 |
| **1418N4SSJ6** | **1418N4S16J6** | 24.00 | 24.00 | 6.00 | 21.00 | 21.00 | 18.00 | 25.25 | 65 |
| **1418N4SSB8** | **1418N4S16B8** | 16.00 | 12.00 | 8.00 | 13.00 | 9.00 | 9.50 | 17.25 | 32 |
| **1418N4SSC8** | **1418N4S16C8** | 20.00 | 16.00 | 8.00 | 17.00 | 13.00 | 10.00 | 21.25 | 38 |
| **1418N4SSD8** | **1418N4S16D8** | 20.00 | 20.00 | 8.00 | 17.00 | 17.00 | 14.00 | 21.25 | 52 |
| **1418N4SSER8** | **1418N4S16ER8** | 20.00 | 24.00 | 8.00 | 17.00 | 21.00 | 18.00 | 21.25 | 61 |
| **1418N4SSH8** | **1418N4S16H8** | 24.00 | 16.00 | 8.00 | 21.00 | 13.00 | 10.00 | 25.25 | 61 |
| **1418N4SSE8** | **1418N4S16E8** | 24.00 | 20.00 | 8.00 | 21.00 | 17.00 | 14.00 | 25.25 | 61 |
| **1418N4SSJ8** | **1418N4S16J8** | 24.00 | 24.00 | 8.00 | 21.00 | 21.00 | 18.00 | 25.25 | 75 |
| **1418N4SSKR8** | **1418N4S16KR8** | 24.00 | 30.00 | 8.00 | 21.00 | 27.00 | 24.00 | 25.25 | 89 |

| 304 S.S. | 316 S.S. | | | | Panel Size | | Mounting Centers | | Ship Wt. |
|---|---|---|---|---|---|---|---|---|---|
| Part No. | Part No. | A | B | C | D | E | F | G | (lbs) |
| 1418N4SSF8 | 1418N4S16F8 | 30.00 | 20.00 | 8.00 | 27.00 | 17.00 | 14.00 | 31.25 | 72 |
| 1418N4SSK8 | 1418N4S16K8 | 30.00 | 24.00 | 8.00 | 27.00 | 21.00 | 18.00 | 31.25 | 89 |
| 1418N4SSKK8 | 1418N4S16KK8 | 30.00 | 30.00 | 8.00 | 27.00 | 27.00 | 24.00 | 31.25 | 100 |
| 1418N4SSL8 | 1418N4S16L8 | 36.00 | 24.00 | 8.00 | 33.00 | 21.00 | 18.00 | 37.25 | 100 |
| 1418N4SSM8 | 1418N4S16M8 | 36.00 | 30.00 | 8.00 | 33.00 | 27.00 | 24.00 | 37.25 | 121 |
| 1418N4SSP8[1] | 1418N4S16P8[1] | 42.00 | 36.00 | 8.00 | 39.00 | 33.00 | 30.00 | 43.25 | 177 |
| 1418N4SSS8[1] | 1418N4S16S8[1] | 48.00 | 36.00 | 8.00 | 45.00 | 33.00 | 30.00 | 49.25 | 207 |
| 1418N4SSC10 | 1418N4S16C10 | 20.00 | 16.00 | 10.00 | 17.00 | 13.00 | 10.00 | 21.25 | 47 |
| 1418N4SSE10 | 1418N4S16E10 | 24.00 | 20.00 | 10.00 | 21.00 | 17.00 | 14.00 | 25.25 | 66 |
| 1418N4SSK10 | 1418N4S16K10 | 30.00 | 24.00 | 10.00 | 27.00 | 21.00 | 18.00 | 31.25 | 120 |
| 1418N4SSL10 | 1418N4S16L10 | 36.00 | 24.00 | 10.00 | 33.00 | 21.00 | 18.00 | 37.25 | 108 |
| 1418N4SSM10 | 1418N4S16M10 | 36.00 | 30.00 | 10.00 | 33.00 | 27.00 | 24.00 | 37.25 | 125 |
| 1418N4SSO10[1] | 1418N4S16O10[1] | 42.00 | 30.00 | 10.00 | 39.00 | 27.00 | 24.00 | 43.25 | 175 |
| 1418N4SSS10[1] | 1418N4S16S10[1] | 48.00 | 36.00 | 10.00 | 45.00 | 33.00 | 30.00 | 49.25 | 215 |
| 1418N4SSJ12 | 1418N4S16J12 | 24.00 | 24.00 | 12.00 | 21.00 | 21.00 | 18.00 | 25.25 | 71 |
| 1418N4SSK12 | 1418N4S16K12 | 30.00 | 24.00 | 12.00 | 27.00 | 21.00 | 18.00 | 31.25 | 95 |
| 1418N4SSM12 | 1418N4S16M12 | 36.00 | 30.00 | 12.00 | 33.00 | 27.00 | 24.00 | 37.25 | 136 |
| 1418N4SSLL12[1] | 1418N4S16LL12[1] | 36.00 | 36.00 | 12.00 | 33.00 | 33.00 | 30.00 | 37.25 | 202 |
| 1418N4SSS12[1] | 1418N4S16S12[1] | 48.00 | 36.00 | 12.00 | 45.00 | 33.00 | 30.00 | 49.25 | 225 |
| 1418N4SST12[1] | 1418N4S16T12[1] | 60.00 | 36.00 | 12.00 | 57.00 | 33.00 | 30.00 | 61.25 | 270 |
| 1418N4SSK16 | 1418N4S16K16 | 30.00 | 24.00 | 16.00 | 27.00 | 21.00 | 18.00 | 31.25 | 100 |
| 1418N4SSM16 | 1418N4S16M16 | 36.00 | 30.00 | 16.00 | 33.00 | 27.00 | 24.00 | 37.25 | 149 |
| 1418N4SSS16[1] | 1418N4S16S16[1] | 48.00 | 36.00 | 16.00 | 45.00 | 33.00 | 30.00 | 49.25 | 290 |
| 1418N4SST16[1] | 1418N4S16T16[1] | 60.00 | 36.00 | 16.00 | 57.00 | 33.00 | 30.00 | 61.25 | 280 |

[1] Does not meet JIC requirements.

*Data subject to change without notice*

© 2015. Hammond Manufacturing Ltd. All rights reserved.