HAMMOND MANUFACTURING

Quality Products. Service Excellence.

Type 12 Mild Steel Wallmount Enclosure *1418J Series*

Continuous Hinge Door with Screws



Inner Panel Included

Application

- Designed to house electrical, electronic, hydraulic or pneumatic controls and instruments.
- Provides a degree of protection from falling dirt, dust, oil and water.

Standards

- UL 508 Type 12
- Complies with
  - NEMA Type 12
  - JIC EGP-1-1967 unless marked[1]
  - IEC 60529, IP54

Construction

- Formed from 14 gauge steel.
- Smooth, continuously welded seams without knockouts, cutouts or holes.
- Door and body stiffeners are provided in the larger enclosures for extra rigidity.
- Welded brackets provide for enclosure mounting.
- Continuously hinged cover is secured with plated screws, threaded into sealed wells.
- Oil resistant gaskets are permanently secured.
- A removable 12 gauge inner panel is included.
- Collar studs are provided for mounting inner panels.
- A bonding stud is provided on the door and a grounding stud is provided or the enclosure.
- A literature pocket is provided for the inside of the door.

Finish

- Cover and enclosure are phosphatized and finished in ANSI 61 gray recoatable powder coating.
- Removable inner panel is finished in white powder coating.

Accessories

- Inner Panels
- Filtered Fans
- Type 1 Louvered Ventilating Plates
- Swing Panel Kit
- Window Kits
- Ventilation
- Heaters
- Terminal Kits
- Temperature Controls

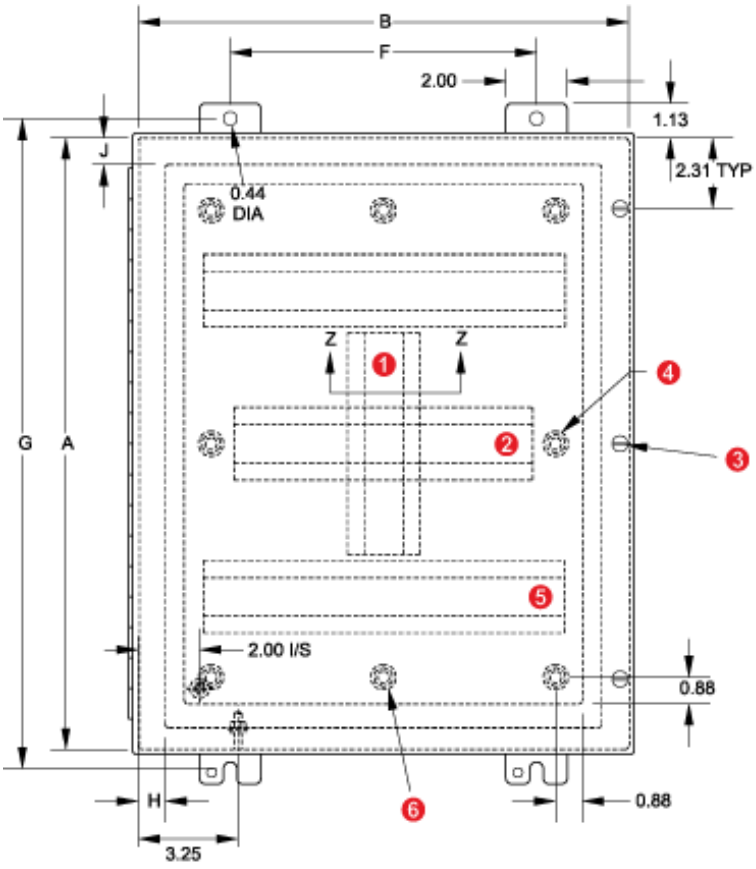

Front View

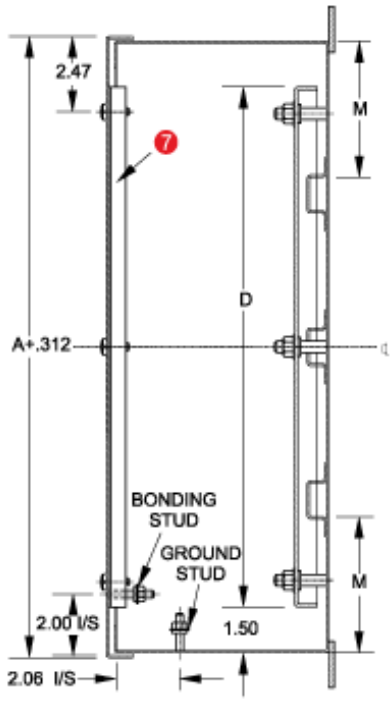

Side View

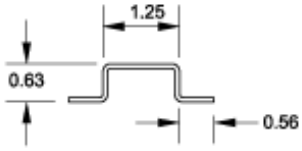

Section Z-Z

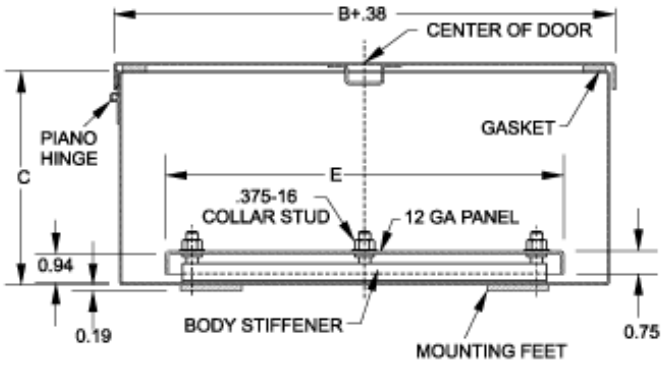

Top View

1. Vertical body stiffener req'd on M only
2. Omit center body stiffener if A is less than 41"
3. Omit if A is less than 31"
4. Omit 2 center studs if A is less than 31"
5. Omit body stiffeners if B is less than 29"
6. Omit 2 middle studs if B is less than 31"
7. Omit door stiffener if A or B is 24" or less

When A=	M=
30.00	7.00
36.00	9.00
42.00	9.88
48.00	11.38

				Panel Dimensions		Centers				Ship Wt.
Part No.	A	B	C	D	E	F	G	H	J	(lbs)
1418JB7	16.00	12.00	7.00	13.00	9.00	9.50	17.25	0.88	0.50	30
1418JC7	20.00	16.00	7.00	17.00	13.00	10.00	21.25	0.88	0.88	38
1418JD7	20.00	20.00	7.00	17.00	17.00	14.00	21.25	0.88	0.50	45
1418JE7	24.00	20.00	7.00	21.00	17.00	14.00	25.25	0.88	0.50	54

				Panel Dimensions		Centers				Ship Wt.
Part No.	A	B	C	D	E	F	G	H	J	(lbs)
1418JJ7	24.00	24.00	7.00	21.00	21.00	18.00	25.25	0.88	0.50	63
1418JF7	30.00	20.00	7.00	27.00	17.00	14.00	31.25	0.88	0.50	70
1418JK7	30.00	24.00	7.00	27.00	21.00	18.00	31.25	0.88	0.50	78
1418JL7	36.00	24.00	7.00	33.00	21.00	18.00	37.25	0.88	0.50	90
1418JC9	20.00	16.00	9.00	17.00	13.00	10.00	21.25	0.88	0.50	42
1418JD9	20.00	20.00	9.00	17.00	17.00	14.00	21.25	0.88	0.50	45
1418JE9	24.00	20.00	9.00	21.00	17.00	14.00	25.25	0.88	0.50	60
1418JJ9	24.00	24.00	9.00	21.00	21.00	18.00	25.25	0.88	0.50	67
1418JK9	30.00	24.00	9.00	27.00	21.00	18.00	31.25	0.88	0.50	85
1418JF9	30.00	20.00	9.00	27.00	17.00	14.00	31.25	0.88	0.50	70
1418JM9	36.00	30.00	9.00	33.00	27.00	24.00	37.25	1.38	1.38	120
1418JL9	36.00	24.00	9.00	33.00	21.00	18.00	37.25	0.88	0.50	100
1418JO9[1]	42.00	30.00	9.00	39.00	27.00	24.00	43.25	1.38	1.38	137
1418JP9[1]	42.00	36.00	9.00	39.00	33.00	30.00	43.25	1.38	1.38	165
1418JJ11	24.00	24.00	11.00	21.00	21.00	18.00	25.25	0.88	0.50	73
1418JL11	36.00	24.00	11.00	33.00	21.00	18.00	37.25	0.88	0.50	107
1418JS11[1]	48.00	36.00	11.00	45.00	33.00	30.00	49.25	1.38	1.38	187
1418JK13	30.00	24.00	13.00	27.00	21.00	18.00	31.25	0.88	0.50	94
1418JM13	36.00	30.00	13.00	33.00	27.00	24.00	37.25	1.38	1.38	131

[1] Does not meet JIC requirements

Data subject to change without notice

© 2015. Hammond Manufacturing Ltd. All rights reserved.