HAMMOND MANUFACTURING

Quality Products. Service Excellence.

Type 12 Mild Steel Junction Box *1414 PH Series*

Continuous Hinge Door with Clamps



Inner Panel Included

Application

- Designed for use as instrument enclosures, electric, hydraulic or pneumatic control housings, electrical junction boxes or terminal wiring enclosures.
- Provides a degree of protection from falling dirt, dust, oil and water.

Standards

- UL 508 Type 12, 13
- CSA Type 12, 13
- Complies with
  - NEMA Type 12 and 13
  - JIC EGP-1-1967 unless marked[1]
  - IEC 60529, IP54

Construction

- Body formed from 16 gauge or 14 gauge steel. Covers are formed from 14 gauge steel.
- Smooth, continuously welded seams without knockouts, cutouts or holes.
- Welded brackets provide for enclosure mounting.
- Continuously hinged cover is secured with stainless steel clamps and plated steel screws.
- Seamless poured-in place gasket.
- Models larger than 4" x 4" include a removable 14 gauge inner panel.
- Internal threaded weld studs are provided for mounting inner panels.
- A bonding stud is provided on the door and a grounding stud is provided in the enclosure.

Finish

- Cover and enclosure are phosphatized and finished in ANSI 61 gray recoatable powder coating.
- Removable inner panel is finished in white powder coating.

Accessories

- Inner Panels
- Door Clamping Hardware
- Heaters
- Terminal Kit Assemblies
- Swing Panel Kit
- Ventilation
- Filtered Fans
- Type 1 Louvered Ventilating Plates
- Temperature Controls

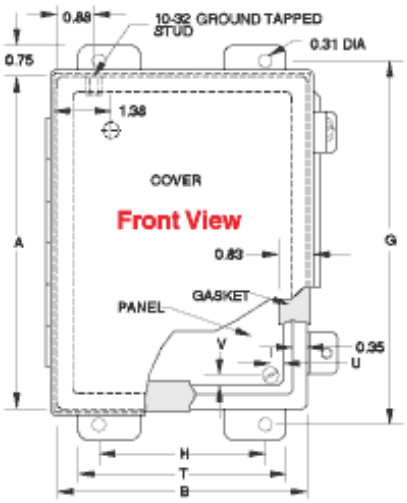

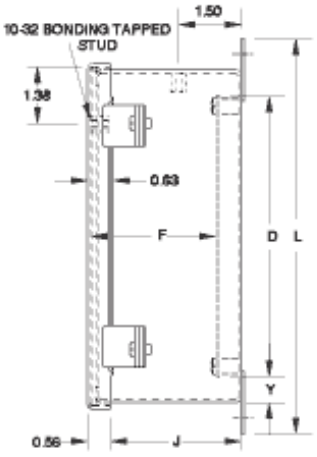

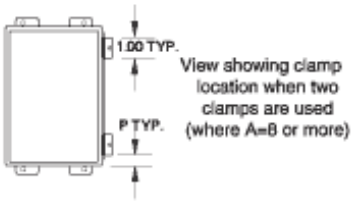

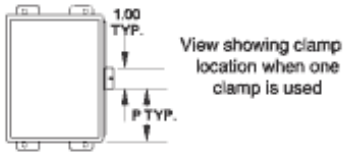

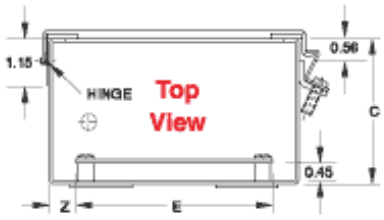

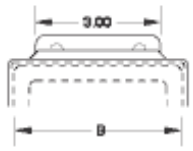

Mounting Foot Detail When B=4

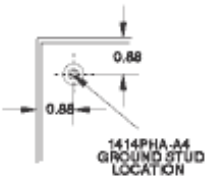

Part No. w/ Inner Panel	Part No. w/o Inner Panel	A	B	C	D	E	F	G	H	J	L	P	T	U	V	Y	Z	Ship Wt. (lbs) w/ Inner Panel	Ship Wt. (lbs) w/o Inner Panel
-	**1414PHA[1]**	4.00	4.00	3.00	-	-	-	4.75	2.00	2.64	5.50	1.50	3.00	-	-	-	-	-	2
1414PHC[1]	**1414PHCLP[1]**	6.00	4.00	3.00	4.88	2.88	2.51	6.75	2.00	2.64	7.50	2.50	3.00	0.31	0.31	0.56	0.56	3	2
1414PHG	**1414PHGLP**	8.00	6.00	3.50	6.75	4.88	31.00	8.75	4.00	3.14	9.50	1.00	5.00	0.31	0.25	0.63	0.56	6	5
1414PHRG	**1414PHRGLP**	6.00	8.00	3.50	4.88	6.75	31.00	6.75	6.00	3.14	7.50	2.50	7.00	0.25	0.31	0.56	0.63	6	5
-	**1414PHA4[1]**	4.00	4.00	4.00	-	-	-	4.75	2.00	3.64	5.50	1.50	3.00	-	-	-	-	-	3
1414PHC4[1]	**1414PHC4LP[1]**	6.00	4.00	4.00	4.88	2.88	3.51	6.75	2.00	3.64	7.50	2.50	3.00	0.31	0.31	0.56	0.56	4	3
1414PHE	**1414PHELP**	6.00	6.00	4.00	4.88	4.88	3.51	6.75	4.00	3.64	7.50	2.50	5.00	0.31	0.31	0.56	0.56	5	4
1414PHH4	**1414PHH4LP**	8.00	8.00	4.00	6.75	6.88	3.51	8.75	6.00	3.64	9.50	1.00	7.00	0.31	0.25	0.63	0.56	8	7
1414PHI	**1414PHILP**	10.00	8.00	4.00	8.75	6.88	3.51	1.75	6.00	3.64	11.50	1.00	7.00	0.31	0.25	0.63	0.56	1	8
1414PHRI	**1414PHRILP**	8.00	10.00	4.00	6.88	8.75	3.51	8.75	8.00	3.64	9.50	1.00	9.00	0.25	0.31	0.56	0.63	1	8
1414PHKC4	**1414PHKC4LP**	12.00	6.00	4.00	10.75	4.88	3.51	12.75	4.00	3.64	13.50	1.00	5.00	0.31	0.25	0.63	0.56	10	8
1414PHK	**1414PHKLP**	12.00	10.00	5.00	10.75	8.88	4.51	12.75	8.00	4.64	13.50	1.00	9.00	0.31	0.25	0.63	0.56	13	10
1414PHRK	**1414PHRKLP**	10.00	12.00	5.00	8.88	10.75	4.51	1.75	10.00	4.64	11.50	1.00	11.00	0.25	0.31	0.56	0.63	13	12
1414PHG6	**1414PHG6LP**	8.00	6.00	6.00	6.75	4.88	5.51	8.75	4.00	5.64	9.50	1.00	5.00	0.31	0.25	0.63	0.56	8	7
1414PHI6	**1414PHI6LP**	10.00	8.00	6.00	8.75	6.88	5.51	1.75	6.00	5.64	11.50	1.00	7.00	0.31	0.25	0.63	0.56	12	10
1414PHJ6	**1414PHJ6LP**	10.00	10.00	6.00	8.75	8.88	5.51	1.75	8.00	5.64	11.50	1.00	9.00	0.31	0.25	0.63	0.56	14	12
1414PHL6	**1414PHL6LP**	12.00	12.00	6.00	10.75	10.88	5.51	12.75	10.00	5.64	13.50	1.00	11.00	0.31	0.25	0.63	0.56	17	15
1414PHMH6	**1414PHMH6LP**	14.00	8.00	6.00	12.75	6.88	5.51	14.75	6.00	5.64	15.50	1.00	7.00	0.31	0.25	0.63	0.56	12	10
1414PHM6	**1414PHM6LP**	14.00	12.00	6.00	12.75	10.88	5.51	14.75	10.00	5.64	15.50	1.00	11.00	0.31	0.25	0.63	0.56	19	17
1414PHRM6	**1414PHRM6LP**	12.00	14.00	6.00	10.88	12.75	5.51	12.75	12.00	5.64	13.50	1.00	13.00	0.25	0.31	0.56	0.63	19	17
1414PHN6	**1414PHN6LP**	16.00	10.00	6.00	14.75	8.88	5.51	16.75	8.00	5.64	17.50	1.00	9.00	0.31	0.25	0.63	0.56	18	15
1414PHO6	**1414PHO6LP**	16.00	14.00	6.00	14.75	12.88	5.51	16.75	12.00	5.64	17.50	1.00	13.00	0.31	0.25	0.63	0.56	23	21
1414PHRO6	**1414PHRO6LP**	14.00	16.00	6.00	12.88	14.75	5.51	14.75	14.00	5.64	15.50	1.00	15.00	0.25	0.31	0.56	0.63	23	21
1414PHK8	**1414PHK8LP**	12.00	10.00	8.00	10.75	8.88	7.51	12.75	8.00	7.64	13.50	1.00	9.00	0.31	0.25	0.63	0.56	18	15
1414PHM8	**1414PHM8LP**	14.00	12.00	8.00	12.75	10.88	7.51	14.75	10.00	7.64	15.50	1.00	11.00	0.31	0.25	0.63	0.56	20	18
1414PHO8	**1414PHO8LP**	16.00	14.00	8.00	14.75	12.88	7.51	16.75	12.00	7.64	17.50	1.00	13.00	0.31	0.25	0.63	0.56	25	22
1414PHO10	**1414PHO10LP**	16.00	14.00	10.00	14.75	12.88	9.51	16.75	12.00	9.64	17.50	1.00	13.00	0.31	0.25	0.63	0.56	26	23

[1] Does not meet JIC Requirements

Data subject to change without notice

© 2015. Hammond Manufacturing Ltd. All rights reserved.