HAMMOND MANUFACTURING

Quality Products. Service Excellence.

Type 12 Mild Steel Junction Box *1414 Series*

Lift-Off Cover with Clamps



Inner Panel Included

Application

- Designed for use as instrument enclosures, electric, hydraulic or pneumatic control housings, electrical junction boxes or terminal wiring enclosures.
- Provides a degree of protection from falling dirt, dust, oil and water.

Standards

- UL 508 Type 12 and 13
- CSA Type 12 and 13
- Complies with
  - NEMA Type 12 and 13
  - JIC EGP-1-1967 unless marked[1]
  - IEC 60529, IP54

Construction

- Body formed from 16 gauge or 14 gauge steel. Covers are formed from 14 gauge steel.
- Smooth, continuously welded seams without knockouts, cutouts or holes.
- Welded brackets provide for enclosure mounting.
- Lift off cover is secured with stainless steel clamps and plated steel screws and retained with a plated chain when open.
- Seamless poured-in place gasket.
- Models larger than 4" x 4" include a removable 14 gauge inner panel.
- Internal threaded weld studs are provided for mounting inner panels.
- A bonding stud is provided on the door and a grounding stud is provided or the enclosure.

Finish

- Cover and enclosure are phosphatized and finished in ANSI 61 gray recoatable powder coating.
- Removable inner panel is finished in white powder coating.

Accessories

- Inner Panels
- Door Clamping Hardware
- Heaters
- Terminal Kit Assemblies
- Swing Panel Kit
- Ventilation
- Filtered Fans
- Type 1 Louvered Ventilating Plates
- Temperature Controls

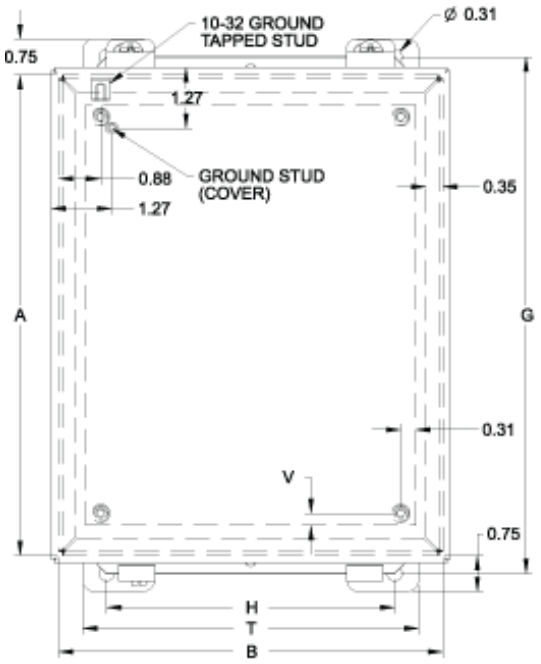

Front View

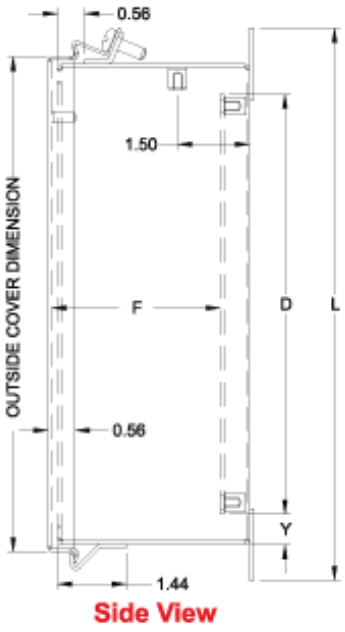

Side View



View showing clamp location when one clamp is used

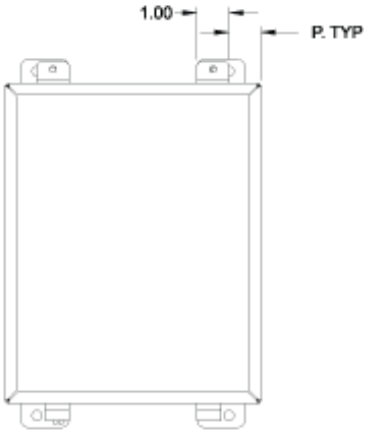

View showing clamp location when two clamps are used (where B=8 or more)

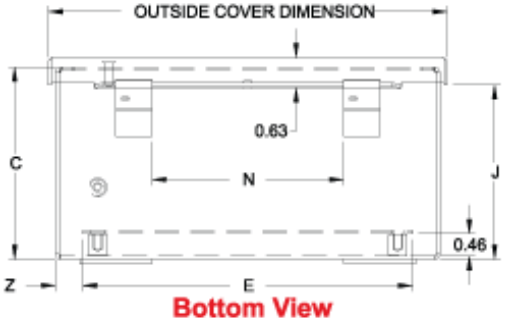

Bottom View

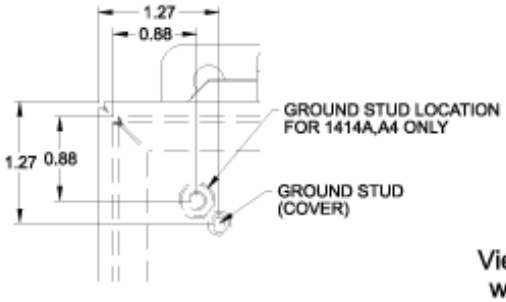

	Overall Dimensions											Cover						Ship Wt.
Part No.	**A**	**B**	**C**	**D**	**E**	**F**	**G**	**H**	**J**	**L**	**N**	**Dimensions**	**P**	**T**	**V**	**Y**	**Z**	**(lbs)**
1414A[1]	4.00	4.00	3.00	-	-	-	4.75	2.00	2 .64	5.50	1.31	4.31	4.31	1.50	3.00	-	-	-	2
1414C[1]	6.00	4.00	3.00	4.88	2.88	2.51	6.75	2.00	2.64	7.50	1.31	6.31	4.31	1.50	3.00	0.31	0.56	0.56	3
1414G	8.00	6.00	3.50	6.75	4.88	3.01	8.75	4.00	3.14	9.50	2.88	8.31	6.31	2.50	5.00	0.25	0.63	0.56	7
1414A4[1]	4.00	4.00	4.00	-	-	-	4.75	2.00	3.64	5.50	1.31	4.31	4.31	1.50	3.00	-	-	-	3
1414C4[1]	6.00	4.00	4.00	4.88	2.88	3.51	6.75	2.00	3.64	7.50	1.31	6.31	4.31	1.50	3.00	0.31	0.56	0.56	4
1414E	6.00	6.00	4.00	4.88	4.88	3.51	6.75	4.00	3.64	7.50	2.88	6.31	6.31	2.50	5.00	0.31	0.56	0.56	5
1414I	10.00	8.00	4.00	8.75	6.88	3.51	10.75	6.00	3.64	11.50	4.00	10.31	8.31	1.00	7.00	0.25	0.63	0.56	10
1414K	12.00	10.00	5.00	10.75	8.88	4.51	12.75	8.00	4.64	13.50	6.00	12.31	10.31	1.00	9.00	0.25	0.63	0.56	13
1414M6	14.00	12.00	6.00	12.75	10.88	5.51	14.75	10.00	5.64	15.50	8.00	14.31	12.31	1.00	11.00	0.25	0.63	0.56	19
1414O6	16.00	14.00	6.00	14.75	12.88	5.51	16.75	12.00	5.64	17.50	10.00	16.31	14.31	1.00	13.00	0.25	0.63	0.56	23
1414M8	14.00	12.00	8.00	12.75	10.88	7.51	14.75	10.00	7.64	15.50	8.00	14.31	12.31	1.00	11.00	0.25	0.63	0.56	20
1414O10	16.00	14.00	10.00	14.75	12.88	9.51	16.75	12.00	9.64	17.50	10.00	16.31	14.31	1.00	13.00	0.25	0.63	0.56	25

[1] Does not meet JIC requirements

Data subject to change without notice

© 2015. Hammond Manufacturing Ltd. All rights reserved.