Top View of Assembly

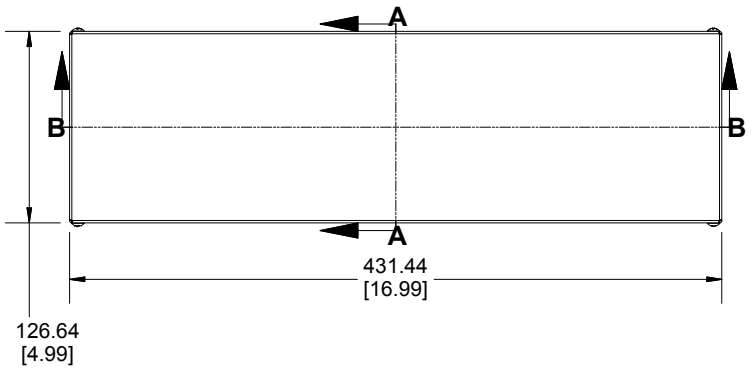

SECTION A-A
End View of Assembly

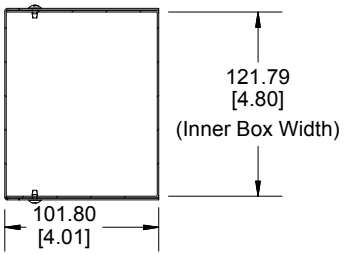

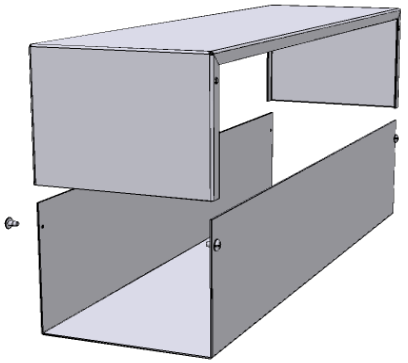

SECTION B-B
Side View of Assembly

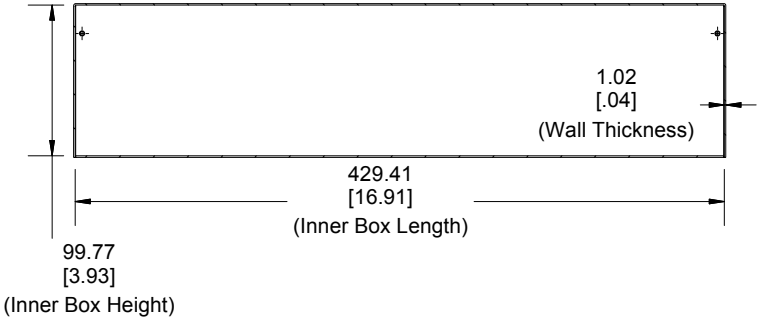

Cover

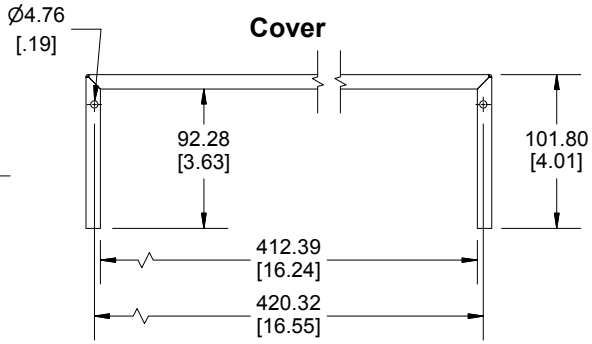

Bottom

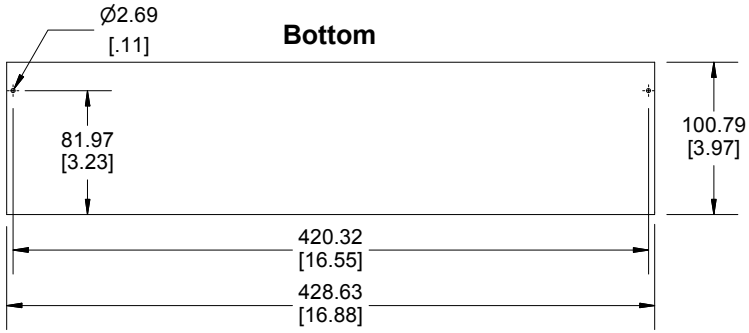

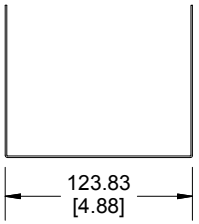

Enclosures can be Factory Modified (Milling, Drilling, Printing etc.)
Contact Factory mjm@hammondmfg.com for quotes
Solid models of this enclosure available in STEP or IGES.

NOTE
Purchased assembly includes bottom, cover and 4 cover screws. Bottom and cover are made from 0.04" Aluminum Panels.

PART NUMBERS	
1411Z Enclosure	
Natural Finish Enclosure	1411ZU
ASA 61 Grey Enclosure	1411Z
ACCESSORIES	
Plated Cover Screws (Pkg 6) [6-32 x 1/4" Self-Tapping Screws]	1421J6

Dimensions:
mm
[inches]

HAMMOND MANUFACTURING™

1411Z

www.hammondmfg.com