Accuride®

MODEL 1332
35 mm Hinges Included

MODEL 1432
Hinges Purchased Separately
Anti-Rak Cable System
Flipper Door Slide®
Up to 75 lb. [34 kg] Capacity

Applications: Vertically mounted concealed doors for office/residential storage cabinets, entertainment centers, and armoires. Use model 1332/1432 with unique Anti-Rak cable system to eliminate door sag and wracking. **This product is covered by U.S. (4,974,912) and various foreign patents issued and/or pending.**

1332/1432
QUICK REFERENCE

Door Sizes:
- Width: 10"– 26"
- Heights: 36"–78"
- Thickness: 3/4" min.–1 1/4" max.

Lengths: 12"–28", 30", 32"
Load: Maximum 75 lbs. per pair
For vertical use only with Anti-Rak cable system

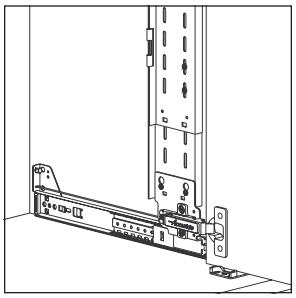

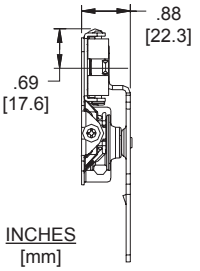

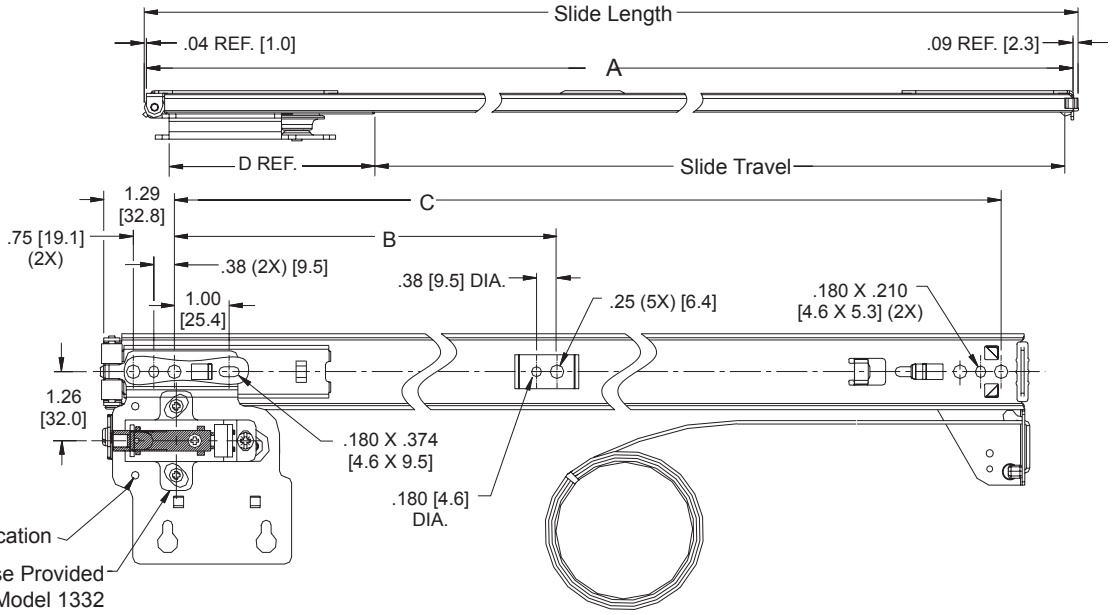

Finish Slide **standard in black zinc (CB)** plating. Bright zinc (C) plating optional. Hinge base available in nickel plate only.•

Door Sizes Widths: 10"–26" [254 mm–660 mm].

Door Heights: 36"–78" [914 mm–1981 mm].

Thickness: 3/4" [19 mm] minimum to 1 ¼" [32 mm] maximum thickness. When door thickness exceeds 13/16" [21 mm], use model 1432 with separately purchased 40 mm hinge.

Lengths 12"–28", 30", 32" [303 mm–711 mm, 762 mm, 813 mm]

Travel See chart

Load Maximum 75 lbs. [34 kgs] per pair

Hinge 35 mm cup; 94° self-close hinge included with 1332. Model 1432 shipped without hinge.

Hinge Carrier Strip Kits are ordered separately for all doors. For 2 doors 36"–56" [914 mm–1422 mm] tall, order 2 hinge carrier kits.

For 2 doors 57"–78" [1448 mm–1981 mm] tall, order 3 kits.

Hardware Slides, cables, and mounting screws provided. Hinge base is pre-mounted only on model 1332.

Operating Envelope A 2"–2 ½" [50.8 mm–63.5 mm] "pocket" is required to clear the retracting door and the protruding hinge arms.

Features Detent out, silenced open and closed.

• RoHS compliant.

Optional part numbers in **BOLD** on chart indicate stocked lengths.

Slide Part Number	Slide Length	Slide Travel	A	B	C	D
1332-12 1432-12	**11.94 [303]**	**8.27 [210]**	**11.81 [299.9]**		**10.10 [256.5]**	3.06 [77.7] REF.
1332-13 1432-13	12.94 [329]	9.27 [235]	12.81 [325.3]		11.10 [281.9]	
1332-14 1432-14	**13.94 [354]**	**10.27 [261]**	**13.81 [350.7]**		**12.10 [307.3]**	
1332-15 1432-15	14.94 [379]	11.27 [286]	14.81 [371.1]		13.10 332.7]	
1332-16 1432-16	**15.94 [405]**	**12.27 [312]**	**15.81 [401.5]**		**14.1 [358.1]**	
1332-17 1432-17	16.94 [430]	13.27 [337]	16.81 [426.9]		15.10 [383.5]	
1332-18 1432-18	**17.94 [456]**	**13.52 [343]**	**17.81 [452.3]**	**6.99 [177.5]**	**16.10 [408.9]**	3.81 [96.8] REF.
1332-19 1432-19	18.94 [481]	14.52 [369]	18.81 [477.7]	7.49 [190.2]	17.10 [434.3]	
1332-20 1432-20	**19.94 [506]**	**15.52 [394]**	**19.81 [503.1]**	**7.99 [202.9]**	**18.10 [459.7]**	
1332-21 1432-21	20.94 [532]	16.52 [419]	20.81 [528.5]	8.49 [215.6]	19.10 [485.1]	
1332-22 1432-22	**21.94 [557]**	**17.52 [445]**	**21.81 [553.9]**	**8.99 [228.3]**	**20.10 [510.5]**	
1332-23 1432-23	22.94 [583]	18.52 [470]	22.81 [579.3]	9.49 [241.0]	21.10 [535.9]	
1332-24 1432-24	**23.94 [608]**	**19.52 [496]**	**23.81 [604.7]**	**9.99 [253.7]**	**22.10 [561.3]**	
1332-25 1432-25	24.94 [633]	20.52 [521]	24.81 [630.1]	10.49 [266.4]	23.10 [586.7]	
1332-26 1432-26	**25.94 [659]**	**21.52 [546]**	**25.81 [655.5]**	**10.99 [279.1]**	**24.10 [612.1]**	
1332-27 1432-27	26.94 [684]	22.52 [572]	26.81 [680.9]	11.49 [291.8]	25.10 [637.5]	
1332-28 1432-28	**27.94 [710]**	**23.52 [597]**	**27.81 [706.3]**	**11.99 [304.5]**	**26.10 [662.9]**	
1332-30 1432-30	**29.94 [760]**	**25.52 [648]**	**29.81 [757.2]**	**12.99 [329.9]**	**28.10 [713.7]**	
1332-32 1432-32	**31.94 [611]**	**27.52 [699]**	**31.81 [807.9]**	**13.99 [355.3]**	**30.10 [764.5]**	

Choose Hinge Carrier Strip Kit

The Accuride 4180 series hinge carrier strip kit accommodates door heights 36" to 78" tall. Based on door height select the number of hinge carrier strips required. Refer to chart below.

Door Height		Number of Hinge Carrier Strips Needed For 2 Doors*
Minimum	Maximum	
36"	56"	4 (2 Kits)
Over 56"	78"	6 (3 Kits)

* **NOTE:** Each hinge carrier strip kit contains 2 strips, 3 connector clips, and assembly hardware.

A minimum overlap of 6" is required for screw access through the slots of the hinge carrier strips. See Figure 4.

Refer to the chart below to determine the number of hinges needed for various door sizes.

Door Heights	Number of Hinges Needed Per Door
36"–47"	3 Hinges
Over 47"–59"	4 Hinges
Over 59"–71"	5 Hinges
Over 71"	6 Hinges

NOTE: Refer to Page 7 for Component Part/Letter Cross Reference (i.e. Ⓙ=Universal Screw).

Figure 1

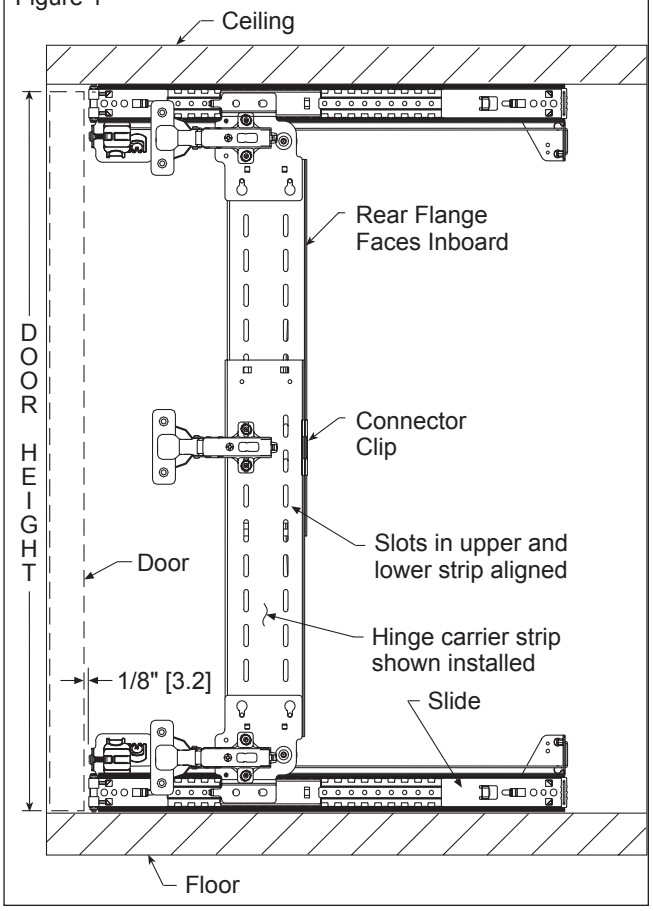

Installation Instructions

STEP 1

Secure Slides

Inset Door

Position slides as shown in Figure 1 against the floor and ceiling of the cabinet to self-align and maximize the leverage. Secure through the mounting slots using #8 X 7/16" universal Ⓙ screws. The slides should be inset 1/8" [3.2 mm] behind rear face of door to provide adequate clearance during door rotation. Ensure cable is not pinched behind slide during fastening.

Overlay Door

Position slides similar to Figure 1, **except** set 1/8" [3.2 mm] back from the front of cabinet. Position against floor and ceiling of the cabinet to self-align and maximize the leverage. Secure through the mounting slots using #8 X 7/16" universal Ⓙ screws. Ensure cable is not pinched behind slide during fastening.

STEP 2

Install Cable System

1. Begin on the top slide. Uncoil cable and route it along the slide and around the pulley groove on upper slide, moving the slide plate to its most rearward position. See Figure 2.
2. Extend cable down to back side of lower pulley. Pass cable around groove in pulley toward front of slide.
3. **Holding lower slide plate fully rearward**, wrap cable around lower adjuster block groove. See Figure 2A.
4. With very light tension, wrap cable once around fixing screw. See Figure 3A for correct cable threading.

NOTE: Hold free end of cable against wall directly behind bracket.

CAUTION: Ensure the ball end of the cable is fully seated in the rear bracket before threading cable through pulleys. **SEE FIGURE 3A.**

Figure 2

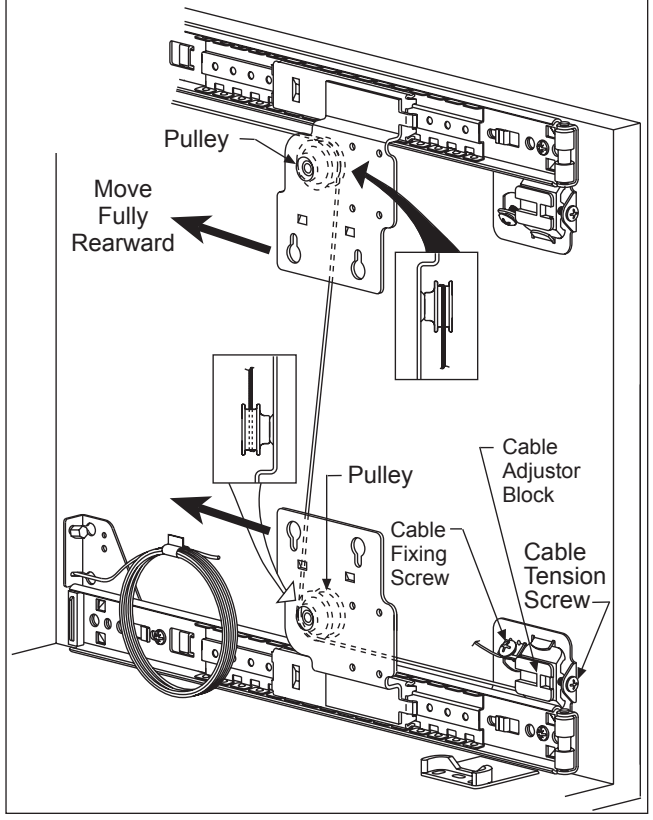

5. Tighten fixing screw and release slide plate.
   CAUTION: Do not cut excess cable yet!
6. In a similar manner, uncoil cable at lower slide and route it along the slide and around front side of pulley groove. See Figure 3.
7. Extend to back side of upper slide pulley. Pass cable around pulley groove and forward. Move upper slide plate to its most rearward position.
8. Wrap cable around upper adjuster block. With very light tension wrap cable around upper fixing screw. Tighten fixing screw. Ensure cable exits screw head near wall. See Figure 3.
9. Bring both slide plates fully forward and engage detents. Adjust cable enough to remove excess slack only.

NOTE: Too much tension in cables will cause poor movement. Ensure both cables are in pulley groove after threading.

STEP 3

Assemble Hinge Carrier Strip

To determine the number of individual hinge carrier strips required, refer to the chart on Page 2. Attach connector clip using #8 screws. See Figure 4.

1. Align the two carrier strips so the Accuride logo is at the top. Flip the top one over, so the logos face each other. Extend the strips and attach to slide plates. See Figure 4.
2. Install two #8 hinge carrier screws Ⓓ on the top and bottom of the assembly (only partially tightening the screws).
3. Snap connector clip Ⓖ into position (to hold strips together), and align the assembly to the slide plates. (Check fit.)
4. Position the hinge carrier strip assembly behind the slide plate, and insert the partially installed mounting screws through the keyhole slots.
5. Expand the assembly into position and fully tighten the screws to secure hinge carrier strip to the inner member Ⓓ.
6. Position the connector clip (or clips) to the desired location and fasten with the remaining #8 screws Ⓓ without hinge base or Ⓔ with hinge base.
7. The connector clip is also used for mounting additional hinge base plates on larger applications using screw Ⓔ.

Figure 2A

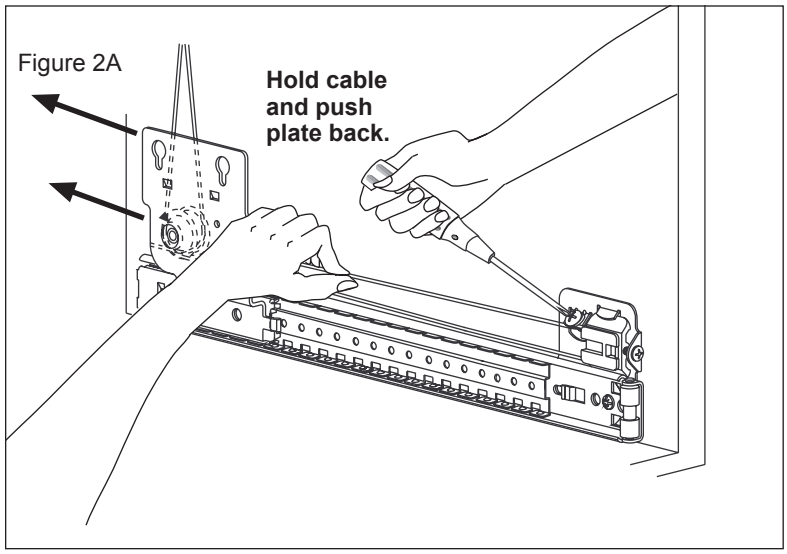

* If holes are not aligned, switch positions of strips. Pre-install screws in end holes for insertion into keyhole slots on slide plate. Connector screws may have to be removed when installing.

Figure 3

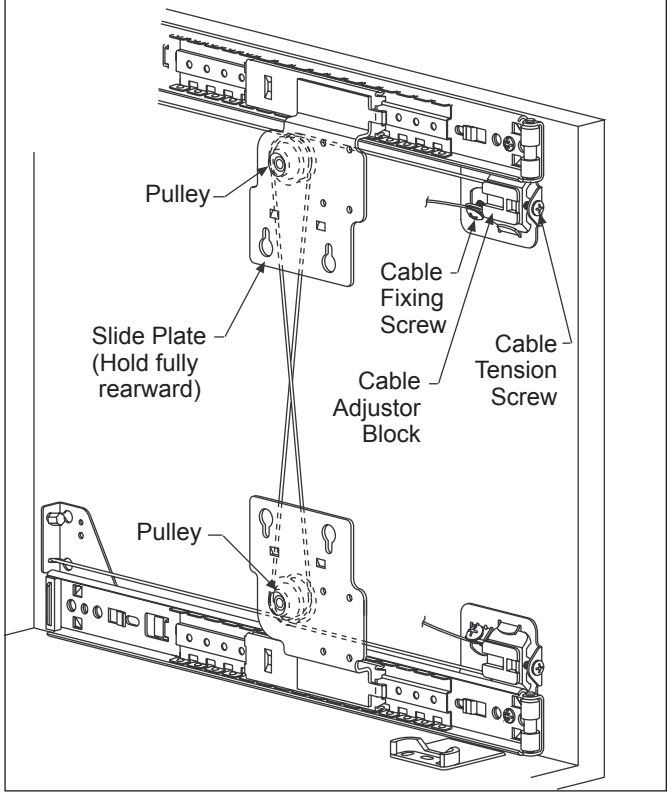

Figure 3A

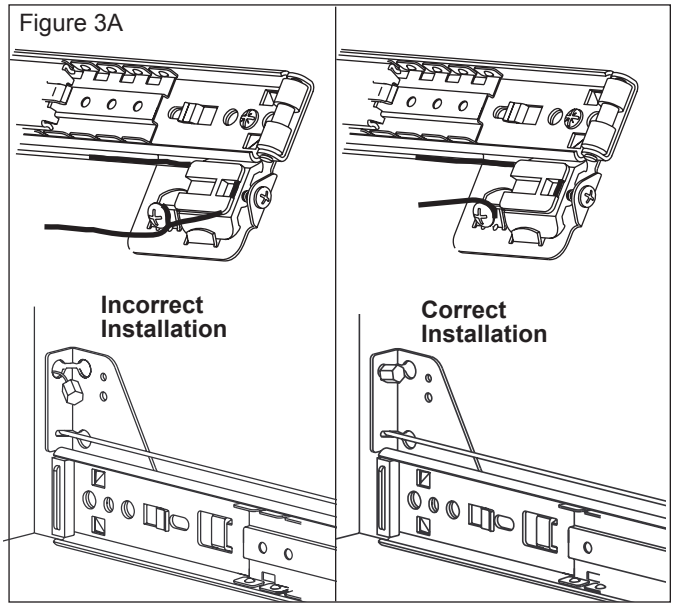

Figure 4

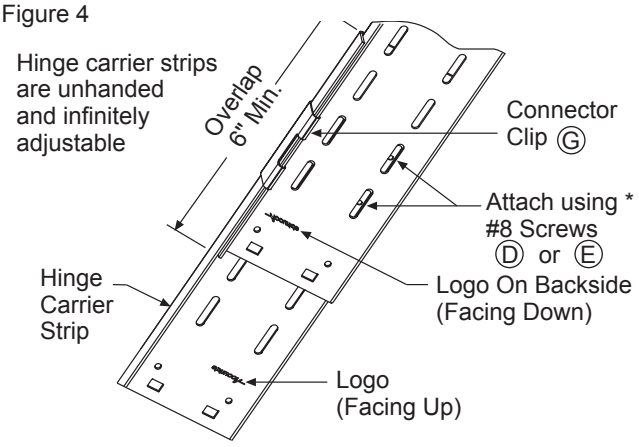

STEP 4

Install Hinge Bases

For model 1332: Hinge base already attached to slide in flush inset position (rearmost holes). See Figure 5.

For model 1432: Select hinge brand and model. Install as shown in Figure 5 for flush inset applications.

- See Page 6 for hinge manufacturers and part numbers by applications.

Mounting with spacers (for hinges other than Salice).

Place spacer(s) between the hinge base and slide plate. Secure with #8 x 5/8" hinge base screws (not provided).

STEP 5

Bore Hinge Cup-35 mm-Model 1332

NOTE: ALWAYS bore a rough simulated door first to verify hinge cup locations.

See Figure 6 for hinge cup hole location. Bore top and bottom 35 mm holes 1/2" [12.7 mm] deep on the inside of door back. Dimensions are based on mounting slides flush with the floor and ceiling.

Inset Doors 3/4"–13/16" [19.0 mm–20.6 mm] 35 mm Salice Hinge (C2P7A33 with 3mm Base)			
Door Thickness	Tab	Door Gap	Door Clearance
3/4" [19.0 mm]	5/16" [8.0 mm]	3/32" * [2.3 mm]	1/16" [1.4 mm]
13/16" [20.6 mm]	11/32" [9.0 mm] ‡	1/16" • [1.8 mm]	1/64" [0.3 mm]

* For smaller door gap, increase tab. Notching may be required.

‡ May require notching.

• Will require hinge lateral adjustment to achieve door gap.

Bore Hinge Cup-40 mm-Model 1432

Inset Thick Doors 13/16"–1 ¼" [20.6 mm–31.8 mm] 40 mm Salice Hinge (CFA7G99 with 3 mm Base)			
Maximum Door Thickness	Tab	Door Gap	Door Clearance
1 ¼" [31.8 mm]	19/32" [15.0 mm]	3/32" [2.3 mm]	1/16" [1.6 mm]

Overlay Doors 3/4" [19.0 mm] Thick 40 mm Salice Hinge (CFA7A99 with 0 mm Base)			
Maximum Door Thickness	Tab	Overlay	Door Clearance
3/4" [19.0 mm]	19/32" [15.0 mm]	7/16" [11.7 mm] +	1/64" [0.4 mm] +

+ To improve door clearance, adjust hinge to increase reveal.

Pocket Width

The chart below lists the pocket width necessary to clear the moving slide members for various door thicknesses where a partition is desired.

Door Thickness	Pocket Width
3/4" [19.0 mm]	2" [50.8 mm]
1" [25.4 mm]	2-1/4" [57.2 mm]
1-1/4" [31.6 mm]	2-1/2" [63.5 mm]

Figure 5 Base mounting position for **flush inset** and **overlay** applications

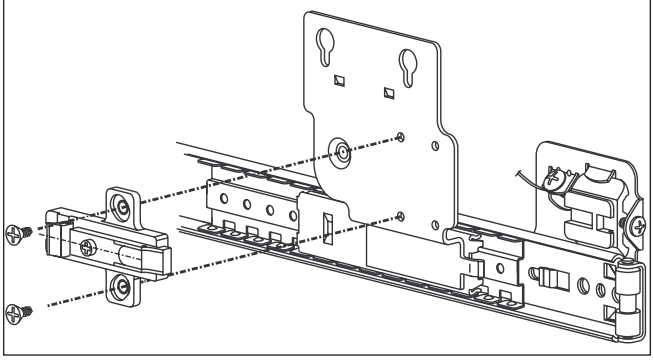

Figure 6

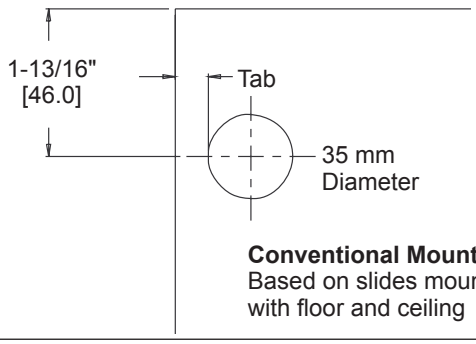

Conventional Mounting
Based on slides mounted flush with floor and ceiling

Figure 7 Door Notching Options

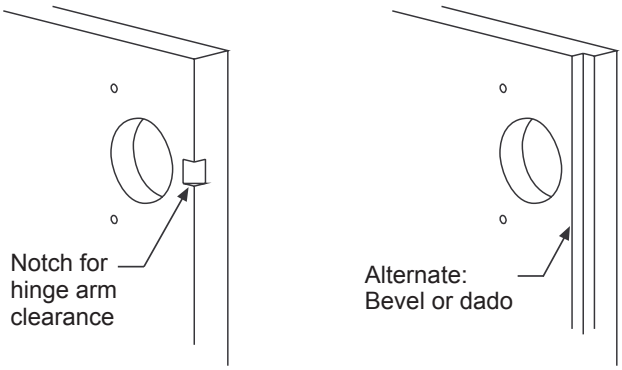

Figure 8

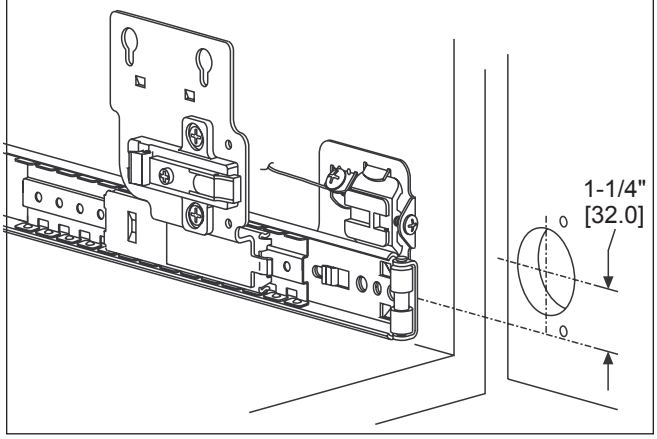

STEP 6

Attaching Hinges

A door notch may be required on doors 13/16" [20.6 mm] and thicker. If so, notch door edge as shown in Figure 7. See tables on Page 6 for tab dimensions. Install hinges (included with Model 1332 only) on door using hinge screws provided.

Alternate Slide Mounting

In cases where the slides are not mounted flush with the floor and ceiling, use slide-to-hinge-cup relationship as shown in Figure 8.

STEP 7

Install Door and Set Hinges

- Clip hinges to bases.
- With door installed and all recommended hinges connected, retract door fully. (See chart on Page 2 for correct number of hinges needed.)
- Check gap at top and bottom of door to cabinet, adjusting with screw A. See Figure 9.
- Close door carefully and adjust gaps as required.

STEP 8

Set Cable Tension

- In extended position, check to ensure top and bottom slides are fully forward and against roller.
- Adjust cable using screws. See Figure 10.
- Tighten lower screw only enough to bring bottom slide forward as needed.
- When correct, adjust upper screw to achieve only a few ounces of cable tension; i.e. just enough tension to keep cable in pully groove.
- Inspect cable routing to ensure the cable is fully engaged in groove.

STEP 9

Final Adjustment-Door Gaps

- Use screw A for height adjustment.
- Use screw B for depth adjustment.
- Use screw C for lateral adjustment. See Figure 9 (Suggest Pozidrive #2 Screwdriver)

STEP 10

Install Pivot Blocks

See Figure 11 for location of the adjustable pivot block at the top and bottom of case. Use 2 blocks per door.

NOTE: The block should just touch the back side of the door in the closed and open positions.

Set optional partition 1/2" [12.7 mm] inboard of the door to clear the hinge knuckles.

STEP 11

Trim Cable

It is strongly recommended that cables not be trimmed closer than 8" [203.2 mm] from the fixing screw. This will allow a grip zone if further adjustments are required. This extra cable can be inserted between the slide and cabinet sidewall and stapled as necessary to keep clear of moving parts. See Figure 12.

Figure 9

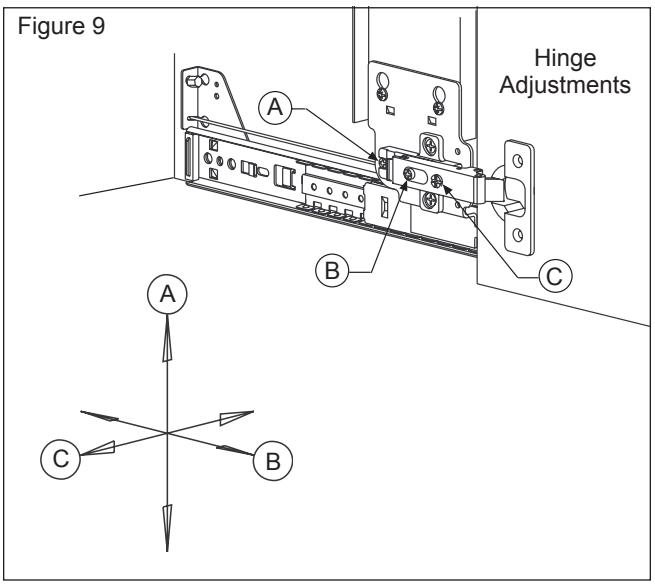

Figure 10

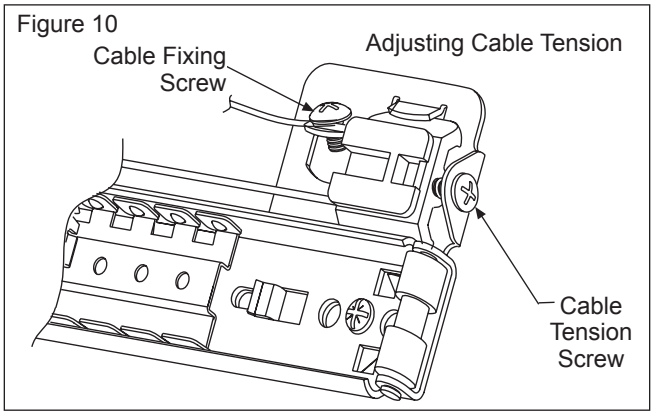

Figure 11

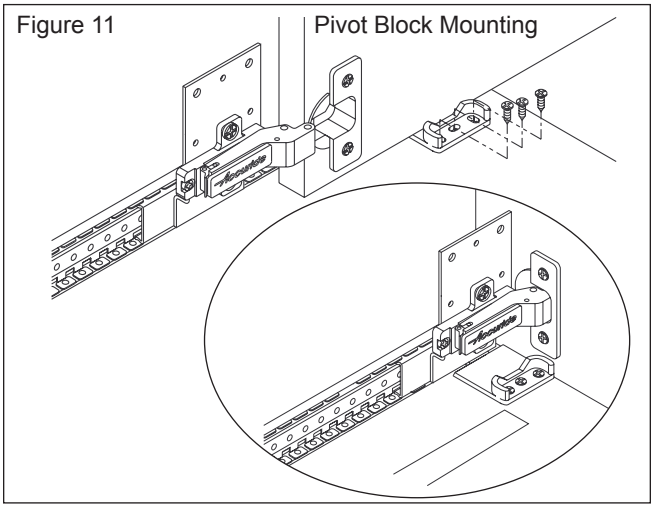

Figure 12

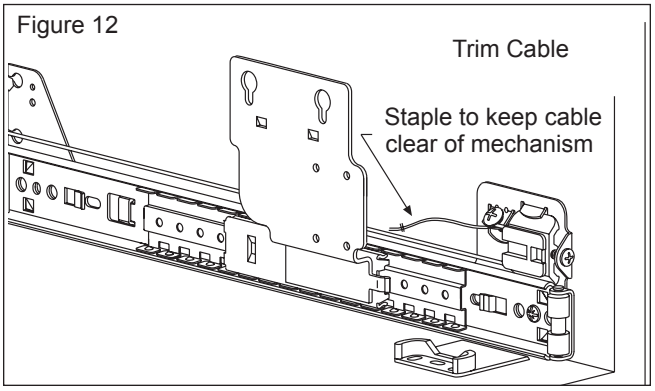

Model 1332 is supplied with 35 mm Salice clip-on hinges (attached to the slides) for inset applications. Model 1432 requires customer-supplied hinges. For thick inset and overlay applications, refer to the chart and drawings below for hinge information.

Hinge	Mfg. Part Number	Door Thickness	Maximum Tab	Minimum Door Gap	Door Clearance
35 mm Inset Doors	(Supplied on 1332) Salice C2P7A33 Base BAR3R39 Accuride Kit P/N **4180-0407-XE**	3/4" [19.0]	5/16" [8.0]	3/32"* [2.3]	1/16" [1.4]
		13/16" [20.6]	11/32" [9.0] ‡	1/16"« [1.8]	1/64" [0.3]
	Mepla 146-305-53-0015 Base 314-393-81-0015	3/4" [19.0]	1/4" [6.5]	1/16"« [1.8]	3/32" [2.4]
		13/16" [20.6]			1/32" [0.8]
	Blum 71T9550 Base 175H9100	3/4" [19.0]	5/16" [8.0]	1/8"* [3.3]	7/32" [5.4]
		13/16" [20.6]			5/32" [3.8]
		7/8" [22.2]			3/32" [2.2]
40 mm Thick Door Inset	Salice CFA7G99 Base BAR3R39 Accuride Kit P/N **4180-0394-XE**	3/4" [19.0]	19/32" [15.0]	3/32" [2.3]	9/16" [14.4]
		13/16" [20.6]			1/2" [12.8]
		7/8" [22.2]			7/16" [11.2]
		15/16" [23.8]			3/8" [9.6]
		1.00" [25.4]			5/16" [8.0]
		1-1/16" [27.0]			1/4" [6.4]
		1-1/8" [28.6]			3/16" [4.8]
		1-3/16" [30.2]			1/8" [3.2]
		1-1/4" [31.8]			1/16" [1.6]
	Mepla 146-425-53-0015 Base 314-393-81-0015	3/4" [19.0]	5/16" [8.0]	1/16 [1.3]	9/32" [7.0]
		13/16" [20.6]			7/32" [5.4]
		7/8" [22.2]			5/32" [3.8]
		15/16" [23.8]			3/32" [2.2]
		1.00" [25.4]			1/32" [0.6]
		1-1/16"¤ [27.0]	7/16" [11.0]		3/32" [2.0]
		1-1/8"¤ [28.6]			1/32" [0.4]
		1-3/16"° [30.2] +	9/16"° [14.0]		1/16" [1.8]
		1-1/4"° [31.8] +			0/00" [0.0]
Overlay Amount					
40 mm Overlay	Salice CFA7A99 Base BAR3R09 Accuride Kit P/N **4180-0292-XE**	3/4" [19.0]	19/32" [15.0]	7/16" [11.7]	1/64" [0.4]

¤ Requires 1 spacer, 3 mm (1/8").
* For smaller door gap, increase tab. Notching may be required.
° Requires 3 mm (1/8") notch to the back of the door.
\+ Requires 2 spacers, 6 mm (1/4").
« Will require hinge lateral adjustment to achieve door gap.
‡ May require notching.

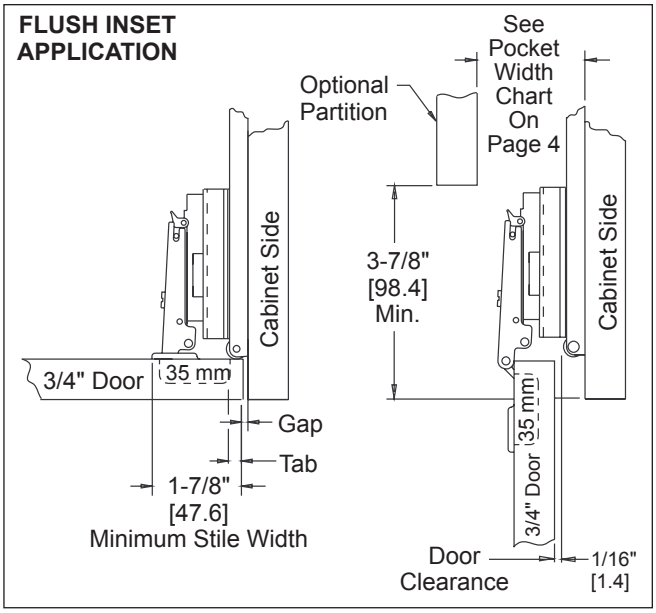

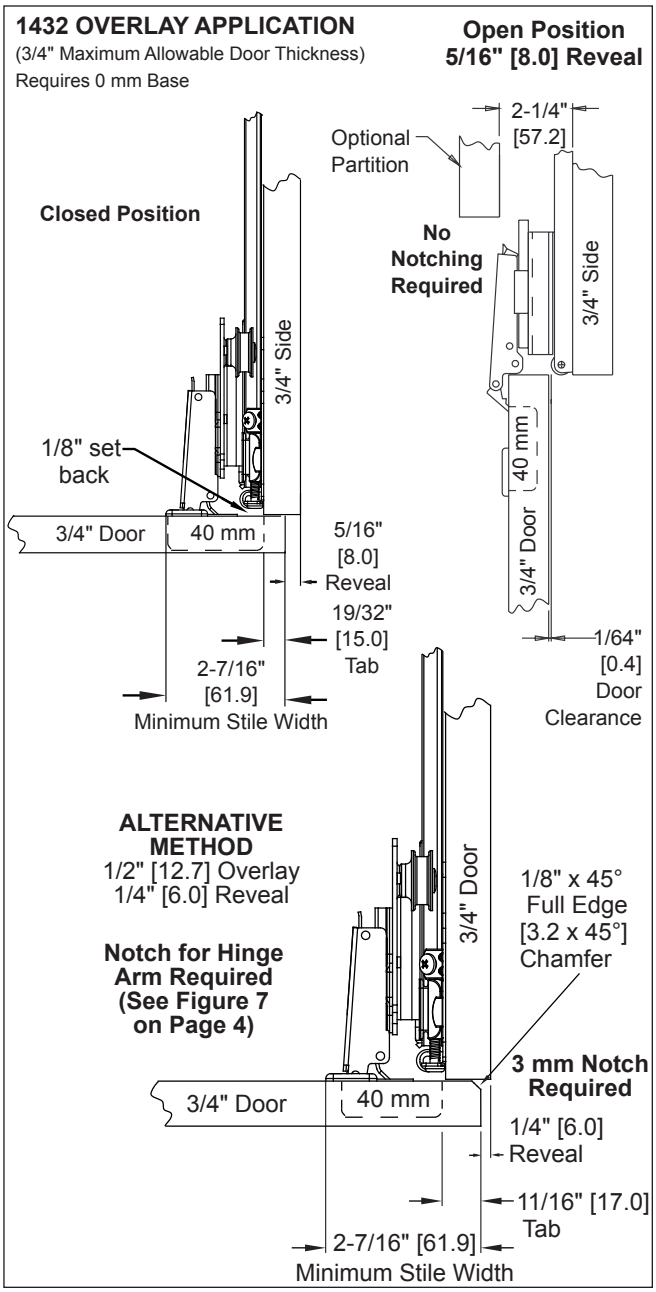

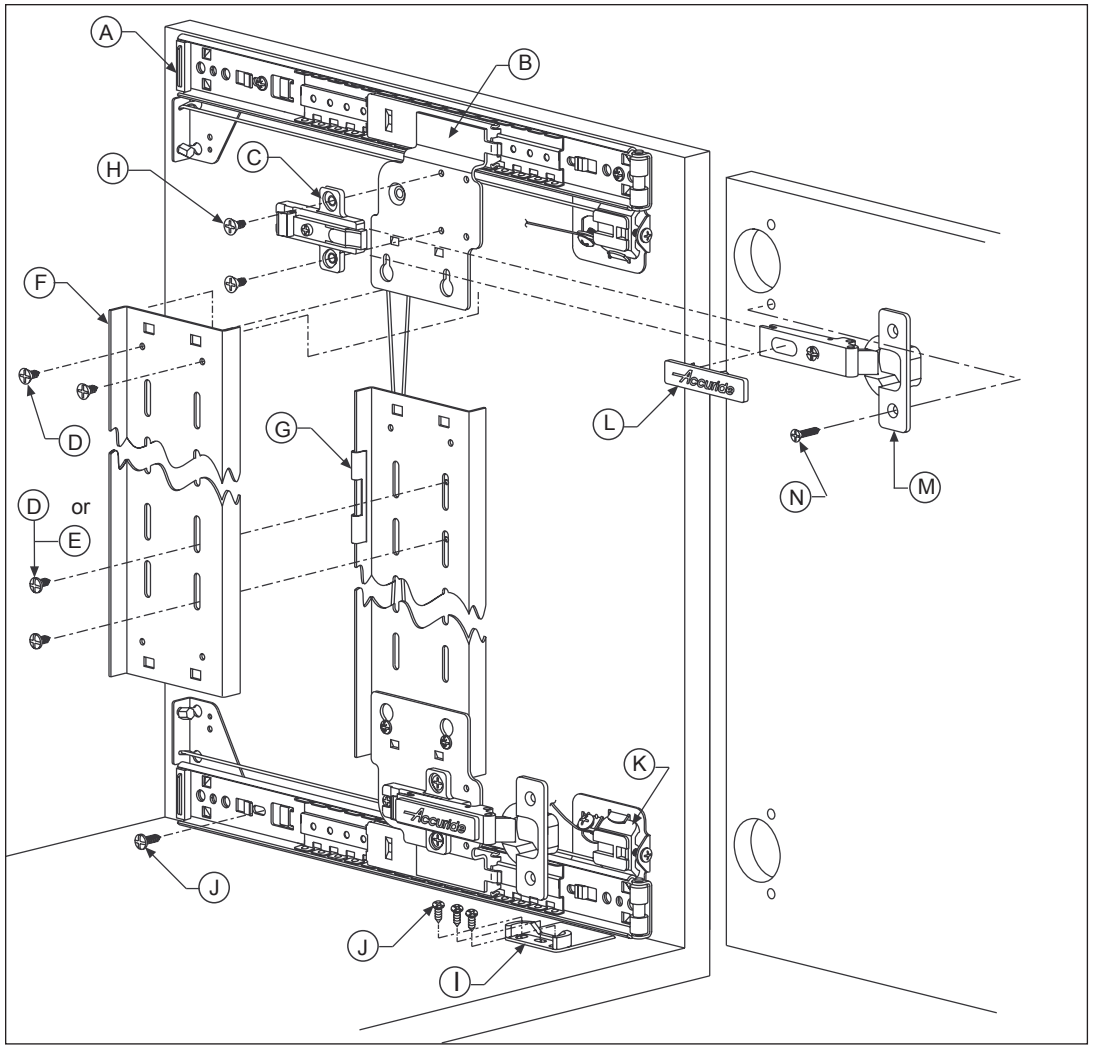

Black Hinge Carrier Strip Kit
Part Number 4180-0408-XE

2 each	Hinge Carrier Strip-Black
3 each	Connector Clip-Stainless Steel
6 each	#8 x 3/8" Pan Head-Black (Without Hinge Base Plate)
6 each	#8 x 5/8" Flat Head-Zinc (With Hinge Base Plate)
1 each	"Caution" Sticker*

Zinc Hinge Carrier Strip Kit
Part Number 4180-0410-XE

2 each	Hinge Carrier Strip-Zinc
3 each	Connector Clip-Stainless Steel
6 each	#8 x 3/8" Pan Head-Zinc (Without Hinge Base Plate)
6 each	#8 x 5/8" Flat Head-Zinc (With Hinge Base Plate)
1 each	"Caution" Sticker*

Extra Connector Clip Kit
Part Number 4180-0412-XE

1 each	Connector Clip-Stainless Steel
2 each	#8 x 3/8" Pan Head-Black (Without Hinge Base Plate)
2 each	#8 x 5/8" Flat Head-Zinc (With Hinge Base Plate)
1 each	"Caution" Sticker*

1332 D-Pack
Black (CB) Finish Hardware Kit

Slide mounting kit includes **black** mounting screws and pivot blocks. Hinge mounting kit includes **black** Salice hinges, **black** hinge screws, and plastic hinge cover caps. Purchase **black** hinge carrier strip kit separately.

1332 D-Pack
Zinc (C) Finish Hardware Kit

Slide mounting kit includes **black** mounting screws and pivot blocks. Hinge mounting kit includes **zinc** Salice hinges, **zinc** hinge screws, and metal emboss hinge cover caps. Purchase **zinc** hinge carrier strip kit separately.

1432 D-Pack
Black (CB) Finish Hardware Kit

Slide mounting hardware kit includes **black** slide mounting screws, base plate mounting screws, and pivot blocks. Purchase **black** hinge carrier strip kit separately.

1432 D-Pack
Zinc (C) Finish Hardware Kit

Slide mounting hardware kit includes **black** slide mounting screws, base plate mounting screws, and pivot blocks. Purchase **zinc** hinge carrier strip kit separately.

Mounting Screws

(D) #8 x 3/8" Pan Head
Zinc/Black
- Attaches hinge carrier strip to the inner member
- Attaches hinge carrier strips together without hinge base plate

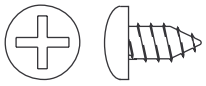

(E) #8 x 5/8" Flat Head
Zinc
- Attaches hinge carrier strips together with hinge base plate
- Attaches base plate to hinge carrier strip

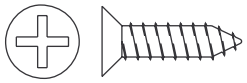

(J) #8 x 7/16" Round Head
Zinc/Black
Accuride Universal Screw

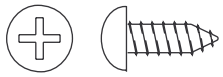

(N) #6 x 5/8" Flat Head
Zinc/Black
Hinge To Door Screws

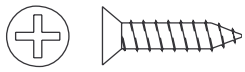

(H) #8 x 3/8" Flat Head
Zinc Base Plate Screw

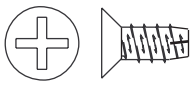

Component Parts

(A) 1332/1432 Slide

(B) Inner Member Hinge Plate

(C) Hinge Base Plate

(F) Hinge Carrier Strip

(G) Connector Clip

(I) Pivot Block

(K) Cable Adjustor Block

(L) Hinge Arm Cover Cap

(M) 35 mm Salice Clip-On Hinge (1332 only)

Additional Hinge Kits

To order additional hinge kits for inset doors, thick inset doors, or for overlay doors, see below for kit part numbers and contents.

Model 1332
35 mm Hinge Kit for Inset Doors
3/4" to 13/16" [19.0 mm–20.6 mm] Thick

Black Finish Part Number 4180-0407-XE	Zinc Finish Part Number 4180-0389-XE
2 each	35 mm Salice Black/Zinc Clip-On Hinge
2 each	3 mm Mounting Base Plate
2 each	3 mm Hinge Base Spacer
2 each	Accuride Logo Hinge Arm Cover Cap
4 each	#6 x 5/8" Phillips Flat Head Screw
1 each	"Caution" Door Sticker *

Model 1432
40 mm Hinge Kit for Overlay Doors
3/4" [19.0 mm] Maximum Thickness

Part # 4180-0292-XE

2 each	40 mm Salice Zinc Clip-On Hinge
2 each	0 mm Mounting Base Plate
2 each	3 mm Hinge Base Spacer
4 each	#6 x 5/8" Flat Head Screw-Zinc
2 each	Accuride Logo Cap-Silver
1 each	"Caution" Door Sticker*

Model 1432
40 mm Hinge Kit for Thick Inset Doors
15/16" to 1 ¼" [23.8 mm–31.8 mm] Maximum

Part # 4180-0394-XE

2 each	40 mm Salice Zinc Clip-On Hinge
2 each	3 mm Mounting Base Plate
4 each	3 mm Hinge Base Spacer
4 each	#6 x 5/8" Flat Head Screw-Zinc
2 each	Accuride Logo Cap-Silver
1 each	"Caution" Door Sticker*

* **NOTE:** "Caution" door sticker should be placed on the inside of the cabinet door, visible when the door is retracted. It is to remind the end user to fully extend the door before closing. This will prevent damage to the cabinet. The sticker is light adhesive that is easily removed and will not damage the finish of the cabinet.

Packaging

Distributor (D) Pack: All lengths are packaged 4 pair per box.

Model 1332 Includes:

1 Pair 1332 Slides With Hinge Bases Attached
1 Each Hinge Kit (Black or zinc 35 mm hinge)
1 Each Slide Mounting Hardware Kit
1 Each Installation Sheet

Model 1432 Includes:

1 Pair 1432 Slides Without Hinge Bases
1 Each Slide Mounting Hardware Kit
(Base plate mounting screws included)
1 Each Installation Sheet

Complete your slide order for Accuride Anti-Rak Flipper Door Slide® Model 1332 or 1432 by specifying the following:

10 Pair CB 1332 -14 D
-or-
10 Pair CB 1432 -14 D

Total Slides Required
Slide Finish
Slide Model
(1332 with hinge; 1432 without hinge)
Slide Length
Optional Polybag Packaging

Order additional hinge kits used with models 1332 or 1432 by specifying the following:

2 Each 4180-XXXX-XE

Total Hinge Kits Required
Kit Part Number
(See "Additional Hinge Kits" for part number)

Complete your order for model 1332 or 1432 hinge carrier strip kits by specifying the following:

2 Each 4180-0408-XE (Black)
2 Each 4180-0410-XE (Zinc)

Total Hinge Carrier Strip Kits Required (For 2 doors 42" tall)
Hinge Carrier Strip Part Number

Each kit contains 2 hinge carrier strips, 3 connector clips, and mounting screws.

For 2 doors **36"–56"** tall, order 2 hinge carrier strip kits.

For 2 doors over **56"–78"** tall, order 3 hinge carrier strip kits.

Specifications

Slide members and ball retainers: Cold rolled steel, black*

Ball bearings: Carburized steel

Hinge carrier strip: Cold rolled steel

35 mm hinge cup for C1332 only: Nickel plated stamp steel

RoHS compliant.

Note: Specifications, materials, prices, terms, and delivery are subject to change without notice.

Accuride

ACCURIDE INTERNATIONAL INC.
12311 Shoemaker Avenue
Santa Fe Springs, CA 90670
TEL (562) 903-0200
FAX (562) 903-0208
www.accuride.com
Manufacturing, Engineering, and Sales
United States • Germany • Japan • Mexico • United Kingdom • China

Copyright © 2009 Accuride International Inc. 3700-9441(1080)-MK009-R8-0509