

DIN 7991 | ~ISO 10642

Standard withdrawn

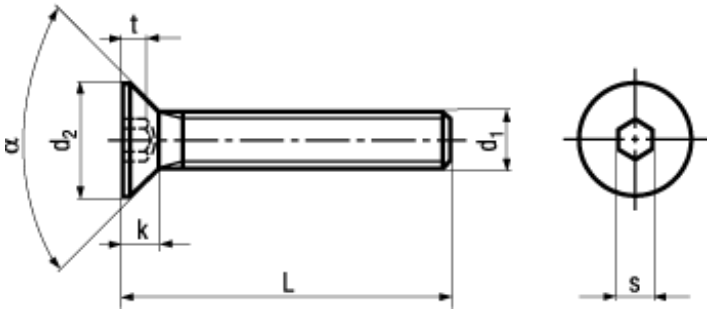

BN 616

Hex socket flat countersunk head screws

fully threaded

Stainless steel A2

- ~UNI 5933

The general change-over from DIN 7991 to ISO 10642 in the practice requires a verification of the application.

Article#	d_1	d_2 max.	k max.	s	t	α	L
8227381	M3	6	1,7	2	1,2	90°	(5)
1076450							(6)
1076469							8
1076477							10
1076485							12
3146455							(14)
1076493							16
3146456							(18)
1076507							20
1115626							25
1115634							30
1208179	M4	8	2,3	2,5	1,8	90°	(6)
1235184							8
1235192							10
1235206							12
3146457							(14)
1235222							16
3146459							(18)
1235230							20
1448587							25
1448595							30
1076515							35
1448609							40

Article#	d_1	d_2 max.	k max.	s	t	α	L
1208187	M5	10	2,8	3	2,3	90°	8
1235249							10
1235257							12
3146461							(14)
1235273							16
3146462							(18)
1235281							20
3146463							(22)
1235303							25
1235311							30
1000241							35
1000268							40
1425277							(45)
1076523							50
1009028							60
3182536							70
1208195	M6	12	3,3	4	2,5	90°	8
1235338							10
1235346							12
3146466							(14)
1235362							16
3146467							(18)
1235370							20
1235389							25
1235397							30
1000462							35
1448617							40
1425285							(45)
1448625							50
5505755							(55)
1076531							60
1208209							70
5522377							80
3213596							100
5505745	M8	16	4,4	5	3,5	90°	10
1208217							12
1235400							16
1235419							20
1235427							25
1235435							30
1076558							35

Article#	d_1	d_2 max.	k max.	s	t	α	L
1235443	M8	16	4,4	5	3,5	90°	40
1425293							(45)
1421832							50
5505746							(55)
1076566							60
1115642							70
1115650							80
3185524							100